AD 729329

AD

USAAMRDL TECHNICAL REPORT 71-27

BEARING AND SEAL SCALABILITY STUDY

By

Louis I. Zirin

June 1971

EUSTIS DIRECTORATE
U. S. ARMY AIR MOBILITY RESEARCH AND DEVELOPMENT LABORATORY
FORT EUSTIS, VIRGINIA

CONTRACT DAAJ02-68-C-0002
GENERAL ELECTRIC COMPANY
WEST LYNN, MASSACHUSETTS

Approved for public release;
distribution unlimited.

Reproduced by
NATIONAL TECHNICAL
INFORMATION SERVICE
Springfield, Va. 22151

D D C
RECEIVED
SEP 13 1971
B

55

Unclassified
Security Classification

DOCUMENT CONTROL DATA - R & D

(Security classification of title, body of abstract and indexing annotation must be entered when the overall report is classified)

1. ORIGINATING ACTIVITY *(Corporate author)* General Electric Company Aircraft Engine Group West Lynn, Massachusetts	2a. REPORT SECURITY CLASSIFICATION Unclassified 2b. GROUP

3. REPORT TITLE

BEARING AND SEAL SCALABILITY STUDY

4. DESCRIPTIVE NOTES *(Type of report and inclusive dates)*
Final Report

5. AUTHOR(S) *(First name, middle initial, last name)*

Louis I. Zirin

6. REPORT DATE June 1971	7a. TOTAL NO. OF PAGES 52	7b. NO. OF REFS 3
8a. CONTRACT OR GRANT NO. DAAJ02-68-C-0002 b. PROJECT NO. c. Task IG163201D44701 d.	9a. ORIGINATOR'S REPORT NUMBER(S) USAAMRDL Technical Report 71-27 9b. OTHER REPORT NO(S) *(Any other numbers that may be assigned this report)*	

10. DISTRIBUTION STATEMENT

Approved for public release; distribution unlimited.

11. SUPPLEMENTARY NOTES	12. SPONSORING MILITARY ACTIVITY Eustis Directorate, U.S. Army Air Mobility Research and Development Laboratory, Fort Eustis, Virginia

13. ABSTRACT

During this analytical study, large aircraft gas turbine engine advanced bearing and seal technology was reviewed to determine those concepts which may be applicable to small, advanced, front drive turboshaft engines in the 2- to 10-lb/sec airflow size. Based on this review and a study of simple mechanical arrangements which appear to be feasible, problems associated with the design of the bearings and seals in these small, advanced turboshaft engines are discussed. Finally, design approaches and test programs required to provide solutions to these problems are recommended.

DD FORM 1 NOV 65 1473 REPLACES DD FORM 1473, 1 JAN 64, WHICH IS OBSOLETE FOR ARMY USE.

Unclassified
Security Classification

DISCLAIMERS

The findings in this report are not to be construed as an official Department of the Army position unless so designated by other authorized documents.

When Government drawings, specifications, or other data are used for any purpose other than in connection with a definitely related Government procurement operation, the United States Government thereby incurs no responsibility nor any obligation whatsoever; and the fact that the Government may have formulated, furnished, or in any way supplied the said drawings, specifications, or other data is not to be regarded by implication or otherwise as in any manner licensing the holder or any other person or corporation, or conveying any rights or permission, to manufacture, use, or sell any patented invention that may in any way be related thereto.

Trade names cited in this report do not constitute an official endorsement or approval of the use of such commercial hardware or software.

DISPOSITION INSTRUCTIONS

Destroy this report when no longer needed. Do not return it to the originator.

ACCESSION for
CFSTI WHITE SECTION ☑
DDC BUFF SECTION ☐
UNANNOUNCED ☐
JUSTIFICATION .....
BY .....
DISTRIBUTION/AVAILABILITY CODES
DIST. | AVAIL. and/or SPECIAL
A

Unclassified
Security Classification

14. KEY WORDS	LINK A ROLE	LINK A WT	LINK B ROLE	LINK B WT	LINK C ROLE	LINK C WT
Bearing						
Seals						
Scalability						
B_{10} Life						
DN						

Unclassified
Security Classification

56506-71

DEPARTMENT OF THE ARMY
U. S. ARMY AIR MOBILITY RESEARCH & DEVELOPMENT LABORATORY
EUSTIS DIRECTORATE
FORT EUSTIS, VIRGINIA 23604

This report was prepared by the Aircraft Engine Group of the General Electric Company, under the terms of Contract DAAJ02-68-C-0002. It discusses the review of gas turbine engine bearing and seal technology conducted in conjunction with the GE12 Demonstrator Engine program.

The objectives of this portion of the contractual effort were (1) to conduct a design review of advanced technology bearing and seal package concepts for large engines to determine which concepts might be applicable to small engines, (2) to determine suitable scale factors from large bearing and seal technology to small engine applications, (3) to recommend systematic test programs to provide scale factor data where scale factors are in question, and (4) to determine what bearing and seal technology is lacking for advanced small engines.

In general, the above objectives were met and are presented in this report.

Appropriate technical personnel of this Directorate have reviewed this report and concur with the conclusions and recommendations contained herein. The Eustis Directorate project engineer for this effort was David B. Cale, Propulsion Division.

Task 1G163201D44701
Contract DAAJ02-68-C-0002
USAAMRDL Technical Report 71-27
June 1971

BEARING AND SEAL SCALABILITY STUDY

Final Report

By

Louis I. Zirin

Prepared by

General Electric Company
West Lynn, Massachusetts

for

EUSTIS DIRECTORATE
U.S. ARMY AIR MOBILITY RESEARCH AND DEVELOPMENT LABORATORY
FORT EUSTIS, VIRGINIA

Approved for public release;
distribution unlimited.

ABSTRACT

During this analytical study, large aircraft gas turbine engine advanced bearing and seal technology was reviewed to determine those concepts which may be applicable to small advanced, front drive turboshaft engines in the 2- to 10-lb/sec airflow size. Based on this review and a study of simple mechanical arrangements which appear to be feasible, problems associated with the design of the bearings and seals in these small, advanced turboshaft engines are discussed. Finally, design approaches and test programs required to provide solutions to these problems are recommended.

TABLE OF CONTENTS

	Page
ABSTRACT	iii
LIST OF ILLUSTRATIONS	vi
LIST OF TABLES	vii
LIST OF SYMBOLS	viii
INTRODUCTION	
Background	1
Purpose	1
TECHNICAL APPROACH	2
LARGE ENGINE BEARING AND SEAL TECHNOLOGY (PHASE I)	3
LARGE ENGINE BEARING AND SEAL PACKAGE CONCEPTS	5
REVIEW OF EXISTING SMALL ENGINES (PHASE II)	14
ADVANCED SMALL ENGINE BEARING AND SEAL CONCEPTS	17
SCALABILITY (PHASES III AND IV)	
Bearings	29
Seals	33
RECOMMENDED TEST PROGRAMS	
Bearings	38
Seals	39
BEARING AND SEAL TECHNOLOGY NEEDED (PHASE V)	40
CONCLUSIONS	42
RECOMMENDATIONS	43
DISTRIBUTION	44

LIST OF ILLUSTRATIONS

Figure		Page
1	Calculated Speed Effect on Bearing Fatigue Lives	4
2	GE CF6-6 Engine Cross Section	6
3	GE F100 Engine Cross Section	7
4	P&WA JT8D Engine Cross Section	10
5	P&WA JT9D Engine Cross Section	11
6	GE F100 Face-Type Differential Carbon Seal Arrangement	12
7	Split-Ring Intershaft Seal Components	13
8	Force-Balanced Split-Ring Seal	13
9	Bearing and Seal Arrangement for a Typical 5- to 10-lb/sec Advanced Small Turboshaft Engine	21
10	Bearing and Seal Arrangement for a 2- lb/sec Small Turboshaft Engine - Front Drive, 4 Bearings	23
11	Bearing and Seal Arrangement for a 2- lb/sec Small Turboshaft Engine - Front Drive with Aft Sump Located Between the High- and Low-Pressure Turbines	25
12	VAST Model for a Front-Drive 2-lb/sec Shaft Engine	27
13	VAST Vibration Analysis for a 2-lb/sec Shaft Engine	28
14	Ball Bearing Fatigue Lives at Various Speeds	30
15	Ball Bearing Fatigue Lives for Various Bore Sizes	31
16	Rotation Effect on Intershaft Bearing Life	32
17	Effect of Ball Diameter on Fatigue Life	34
18	Inertia of Carbon Seal Ring Assembly vs Shaft RPM	36
19	Face Rubbing Seal Area and Weight for 2.0-psi Specific Load Due to Runout Inertia	37

LIST OF TABLES

Table		Page
I	Large Engine Bearing and Sump Comparison	9
II	Current Small Engine Bearing and Seal Arrangements . . .	15
III	Design Criteria	17
IV	Bearing and Seal Design Parameters	19

LIST OF SYMBOLS AND ABBREVIATIONS

C	basic load rating, lb
A_2/W	face seal equivalent of inertia force, lb/in.
B_{10}	the life at which 10% of a large sample of bearings would begin to show signs of fatigue distress
DN	product of bearing bore diameter (mm) and rpm
E-3	computer symbol for 10^{-3}
F_a	bearing axial load, lb
F_I	inertia force, lb/in.
F_r	bearing radial load, lb
GG	gas generator
HP	high pressure
K_x	constant with subscript denotes location in VAST model
LP	low pressure
Mt	mount
N	shaft speed, rpm
P	equivalent load, lb
P_2	compressor inlet pressure, psi
P_3	compressor discharge pressure, psi
Q	heat generation, Btu/min
r	1/2 the shaft runout, in.
T_4	gas temperature at inlet to Stage 1 nozzle, °F
u	lubricant viscosity, centipoise
W	oil flow through bearing, gal/min
ΔP	pressure differential, psi

INTRODUCTION

BACKGROUND

During the next decade, it can be expected that small, advanced, turboshaft engines will be developed in the 2- to 10-lb/sec airflow size. As has been the case in large aircraft gas turbines in recent years, these small turboshaft engines will use advanced compressors, turbines, and combustors. These advanced components, coupled with the use of high DN bearings and high speed seals, should lead to simpler mechanical arrangements.

PURPOSE

The purpose of this study is to review bearing and seal concepts used in large, advanced aircraft gas turbines and to identify those concepts applicable to small, advanced engines in the 2- to 10-lb/sec airflow size. Another purpose of the study is to identify bearing and seal problems which require solution in the design of advanced, small engines.

TECHNICAL APPROACH

The design and analytical study was conducted in the following 5 phases:

Phase I reviews large engine bearing and seal technology and package concepts to determine which concept features might be applicable to small gas turbine engines.

Phase II reviews existing and advanced components for small gas turbine engines of the 2- to 10-lb/sec airflow size to determine the general range of component sizes, speeds, pressures, loads, and temperatures.

Phase III attempts to determine factors for scaling large bearing and seal package technology to small scale applications.

Phase IV identifies problems associated with scaling, and recommends systematic test programs required to provide scale factor data.

Phase V identifies bearing and seal technology that is necessary to provide solutions to the requirements for advanced small engines, and discusses the inherent problems of existing and advanced small engine bearing and seal designs.

LARGE ENGINE BEARING AND SEAL TECHNOLOGY (PHASE I)

In this part of the study, a comprehensive review was conducted of the practices used by the General Electric Company in the design of large engine bearings and seals and is published in GE Report R70AEG345*. This report summarizes main ball and roller bearing designs; bearing heat generation calculations; squeeze-film oil damping; and the effect of ball size, internal geometry, and speed on ball bearing fatigue life. Also discussed is experience with skidding of both ball and roller bearings. The most significant information presented in Report R70AEG345 is the effect of ball size and speed on calculated B_{10} fatigue life as shown in Figure 1. This figure shows that at low DN, B_{10} life can be increased significantly by increasing ball diameter. However, as DN approaches 3×10^6, the calculated B_{10} life of less than 100 hours (without multipliers for material or mission) can be optimized by reducing ball diameter.

Other ways of increasing B_{10} life, by reducing centrifugal force, are the use of either hollow or drilled balls. In the past few years,promising results have been obtained in laboratory testing of these configurations.

Report R70AEG345 also describes the various types of shaft seals used on larger GE engines and the basis for their selection. In general, face-type carbon seals are used when the temperature, ΔP, and surface speed exceed 750 F, 80 psi, and 25,000 ft/min respectively. The J93, GE4, F100, and F101 are large GE engines using face-type carbon seals.

In applications where temperature, ΔP, and speed are lower than the above, and where low oil consumption is required, circumferential carbon seals are used. The J85, T64, J79, J97, and TF34 are GE engines using this type of seal.

In applications where very long life is required, labyrinth seals are used. For example, labyrinth seals are used on the GE TF39 and CF6, the Rolls-Royce RB211, and the HP rotor of the P&WA JT9D. The disadvantage of labyrinth seals is high air leakage into the sumps necessitating large vent systems. Usually, oil consumption is higher than could be achieved with carbon seals.

---

* Perkins, P.A.; Pope, A.N.; Moore, C.C., BEARING AND SEAL SCALABILITY STUDY - LARGE ENGINE TECHNOLOGY, General Electric Co., R70AEG345, November 5, 1970.

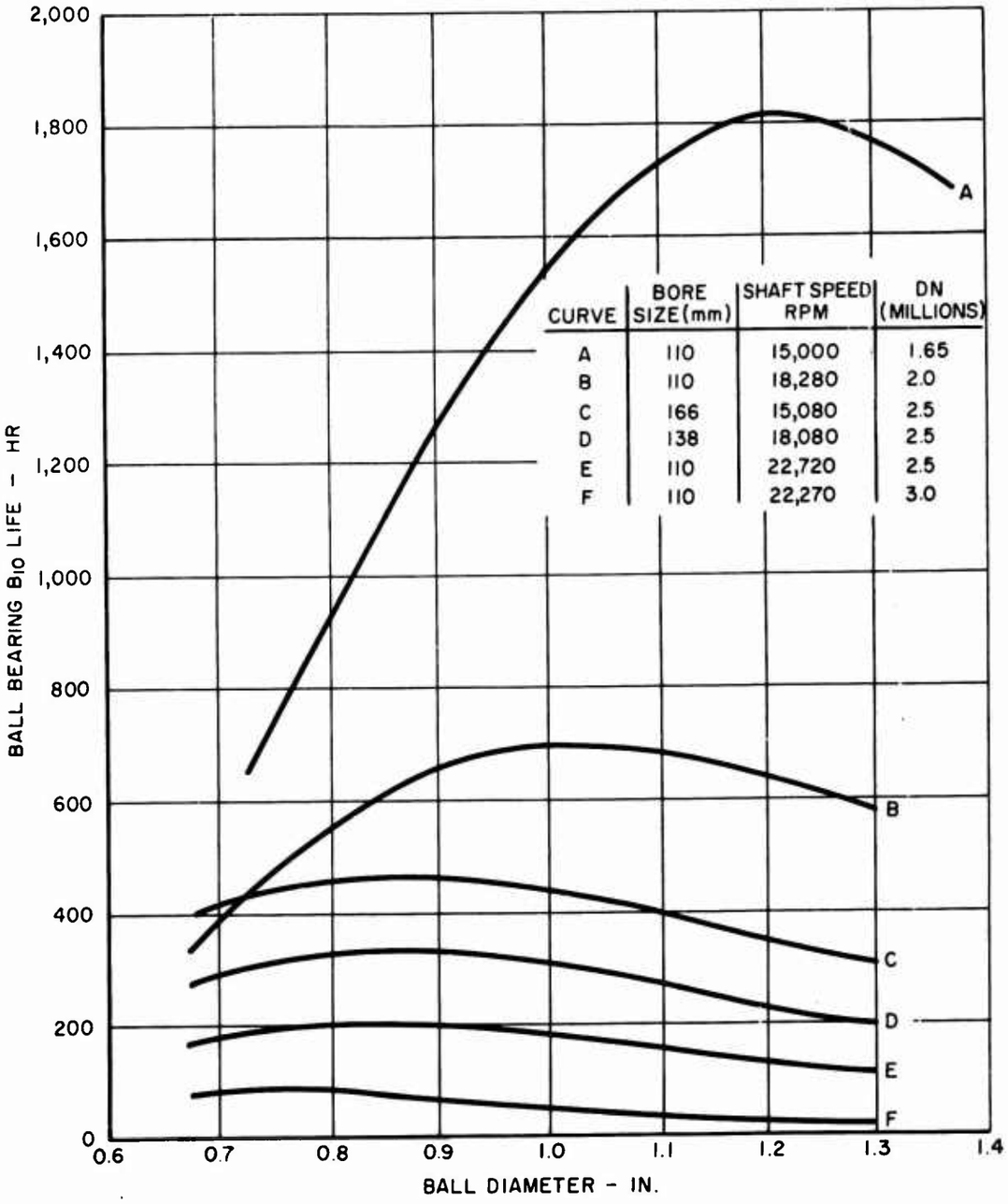

Figure 1. Calculated Speed Effect on Bearing Fatigue Lives.

LARGE ENGINE BEARING AND SEAL PACKAGE CONCEPTS

In the past 10 years, the use of higher DN bearings and higher seal speeds, together with reductions in the lengths of compressors, combustors, and turbines, has led to the simplification of a number of large two-shaft engines. Illustrations of these advances shown in Figures 2 through 5 compare the advanced GE F100 to the older CF6 and compare the new P&WA JT9D to the older JT8D. As shown in Table I, advanced technology, in the case of the P&WA engines, resulted in reducing the number of bearing sumps from 4 to 3 and the number of bearings from 6 to 4. In the case of the GE engines, advanced technology resulted in reducing the number of sumps from 4 to 2 and the number of bearings from 8 to 4. The HP rotors on the newer engines are supported on only 2 bearings.

On the GE F100 engine, reduction to 2 sumps was achieved by supporting the aft HP roller bearings differentially on the LP shaft as shown in Figure 6. The differential bearing arrangements, being used in the aft sump of the GE F101 and other new GE engines, also require a differential carbon seal. The F100 engine used a face-type differential carbon seal as shown in Figure 6. Report R70AEG345* describes a split-ring carbon seal being considered as a simpler, lighter weight replacement for the face-type seal. Figure 7 shows a conventional split-ring seal that can be used at differential pressures up to 35 psi. Figure 8 shows a force-balanced version that is being considered for applications with higher differential pressures.

---

* Ibid (pg 3).

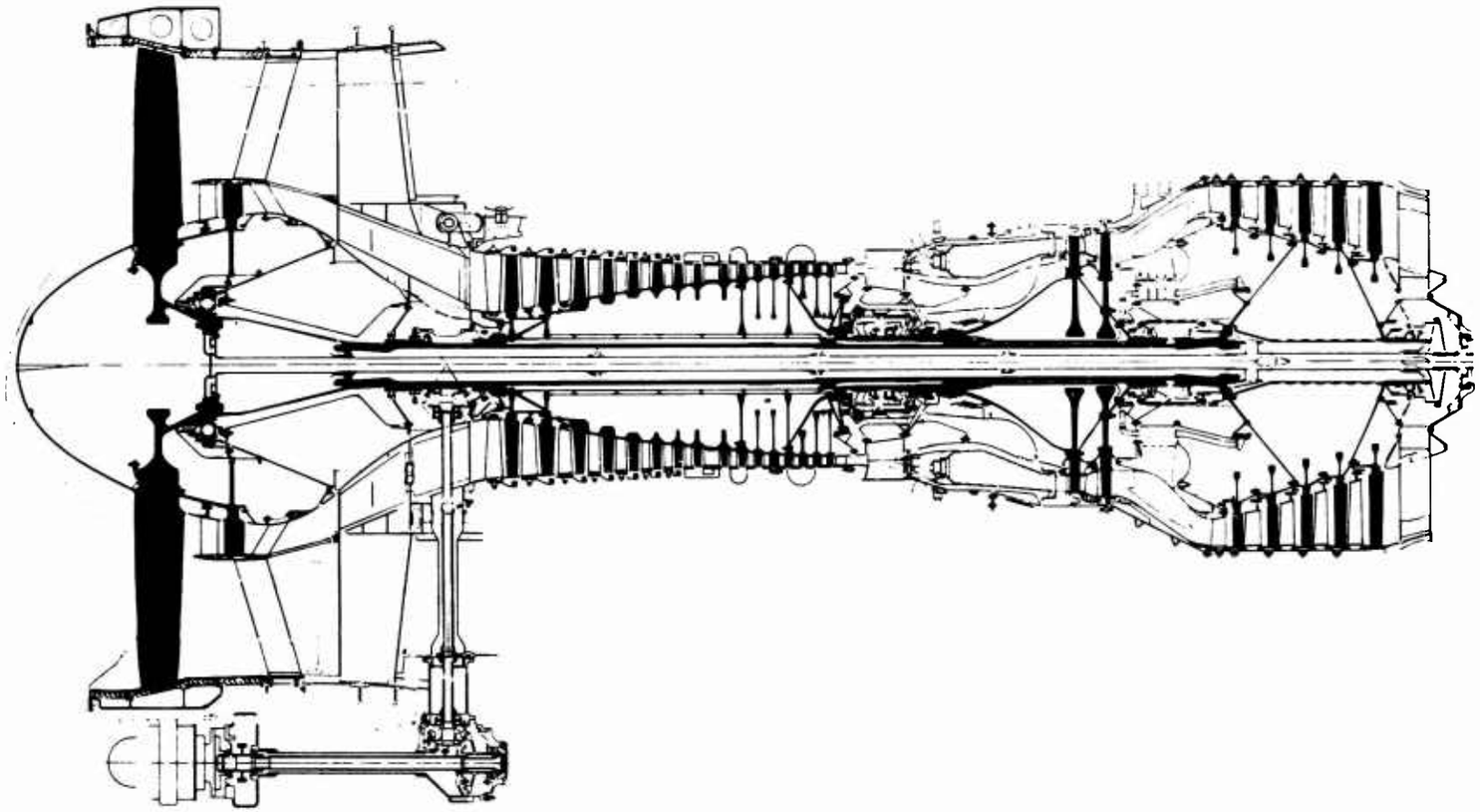

Figure 2. GE CF6-6 Engine Cross Section.

A

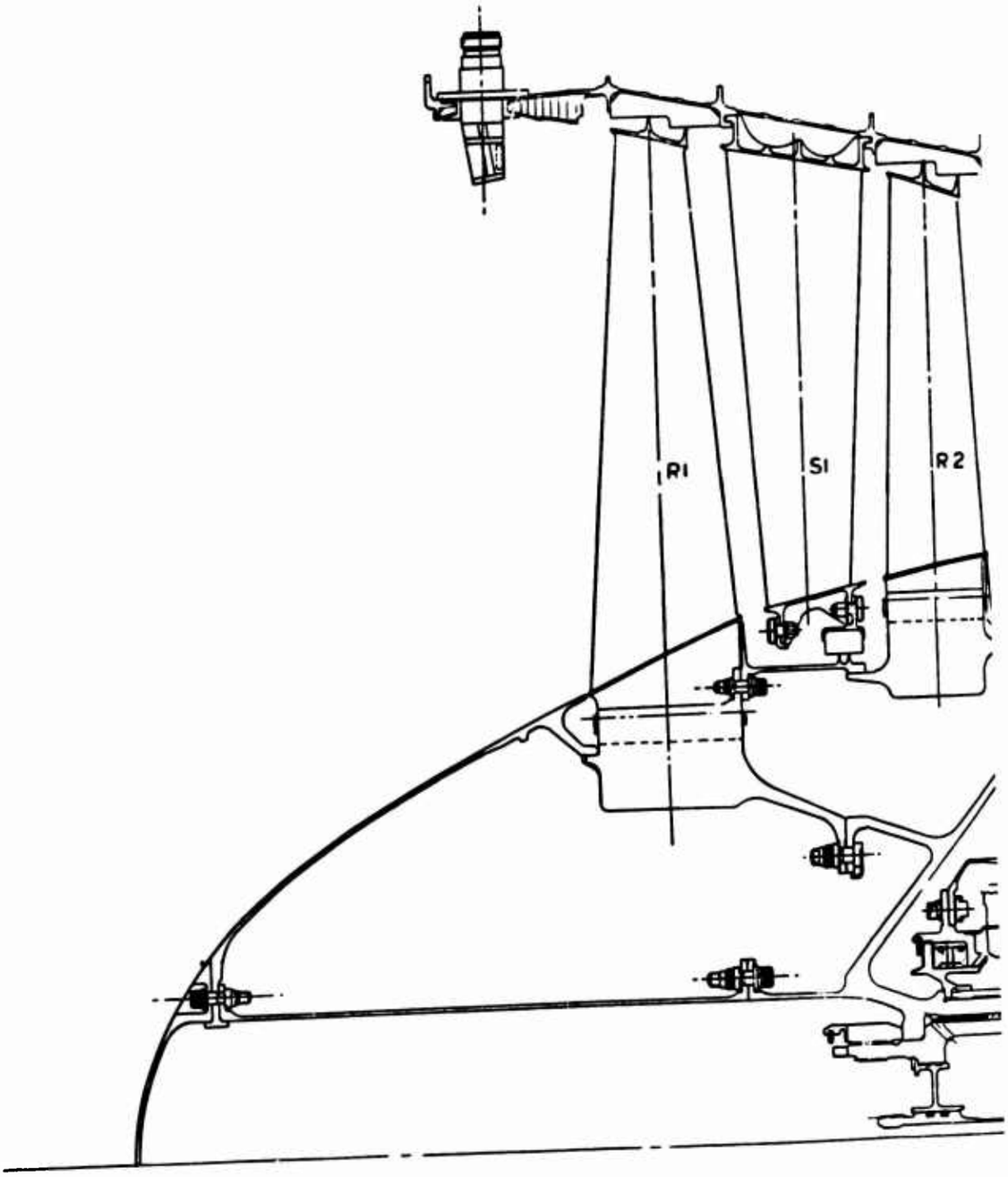

Figure 3. GE F100 Engine Cross Section.

13

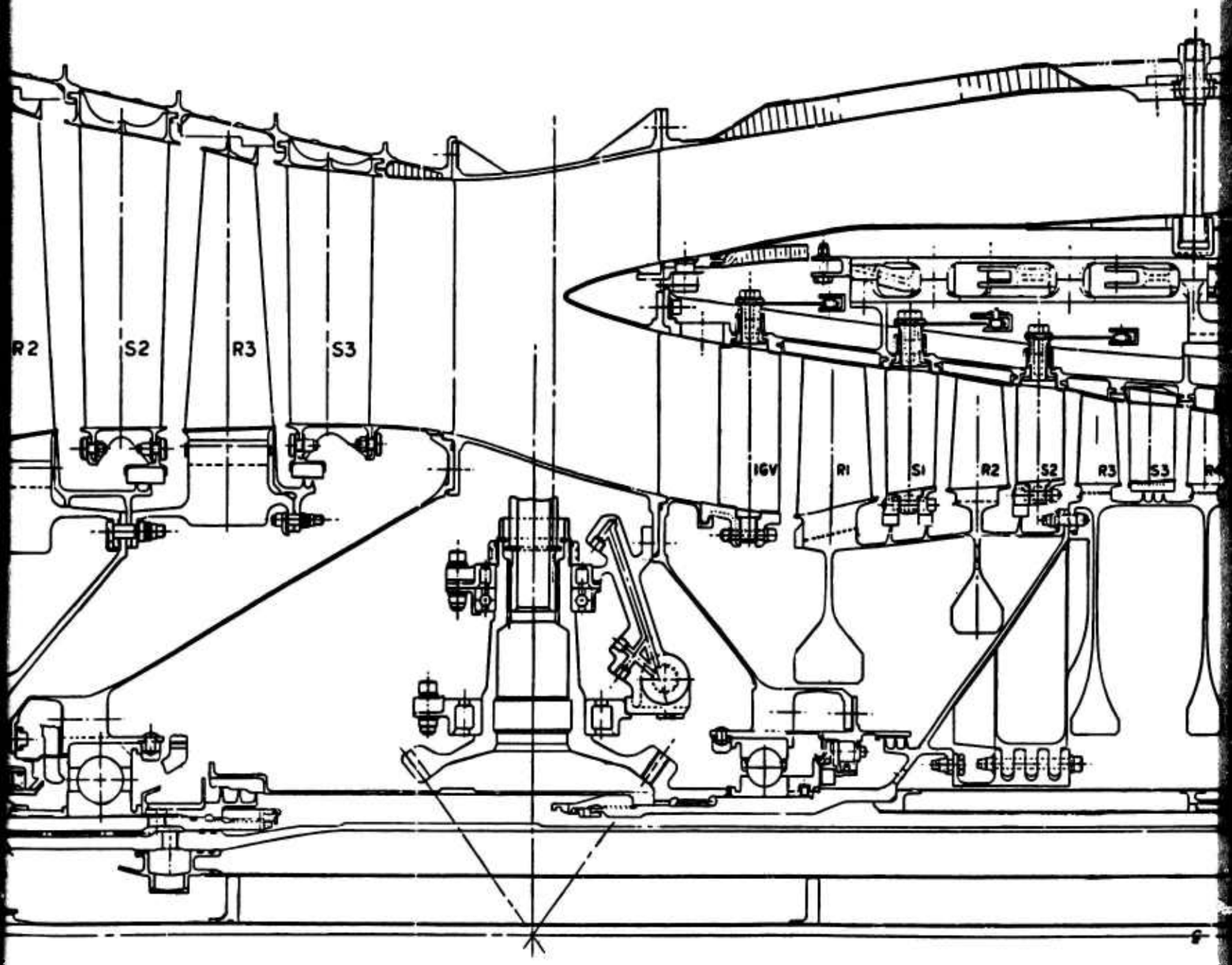

1 c

1

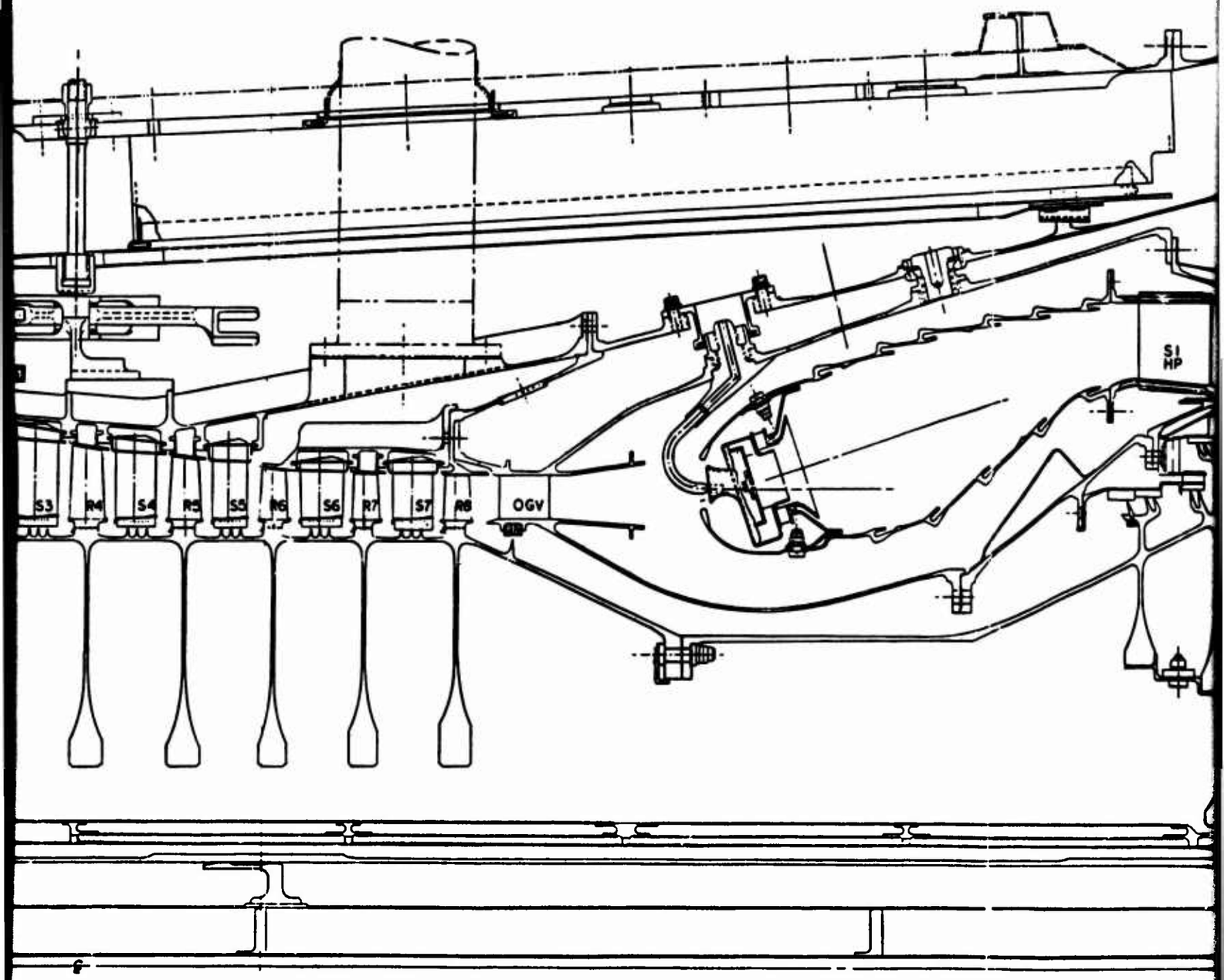

1 D

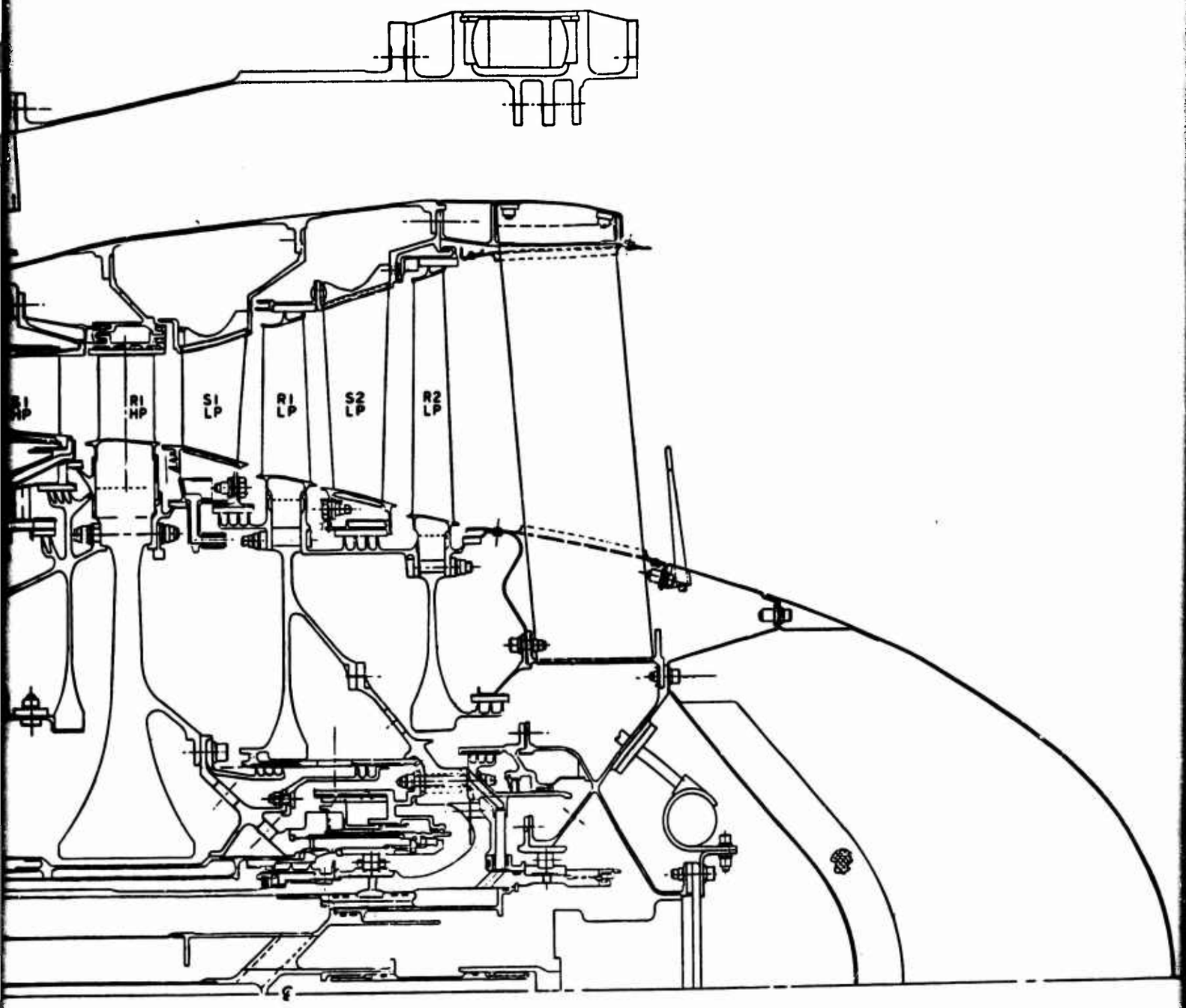

TABLE I. LARGE ENGINE BEARING AND SUMP COMPARISON

Item	GE Co.		P&WA	
	TF39	F100	JT8D	JT9D
No. of Sumps	4	2	4	3
No. of Bearings				
HP Rotor	4	2	3	2
LP Rotor	4	2	3	2
Highest $DN/10^6$				
Ball Bearing	1.63	2.10	1.90	1.80
Roller Bearing	1.63	1.23	-	-
Type Seals				
HP Rotor	Labyrinth	Face Carbon	Labyrinth	Labyrinth
LP Rotor	Labyrinth	Face Carbon	Labyrinth and Circum-ferential Carbon	Face Carbon
Seal Speeds (ft/min)				
HP Rotor	-	25,800	-	-
LP Rotor	-	16,700	-	20,400

PRECEDING PAGE BLANK

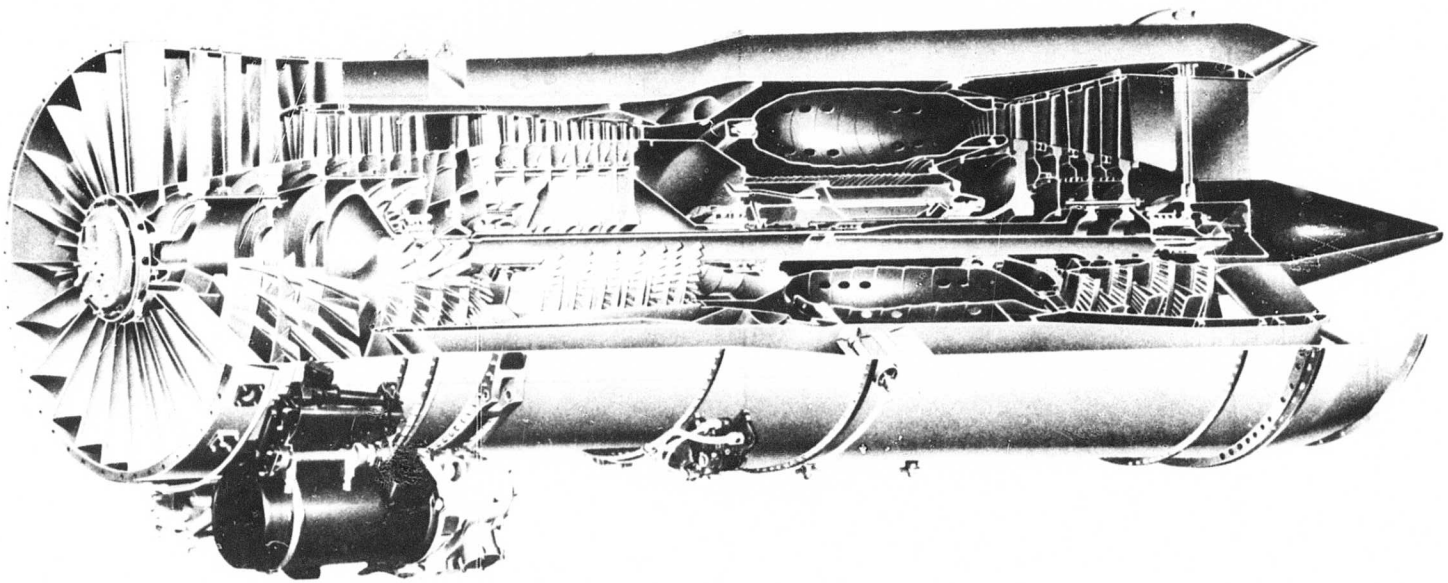

Figure 4. P&WA JT8D Engine Cross Section.

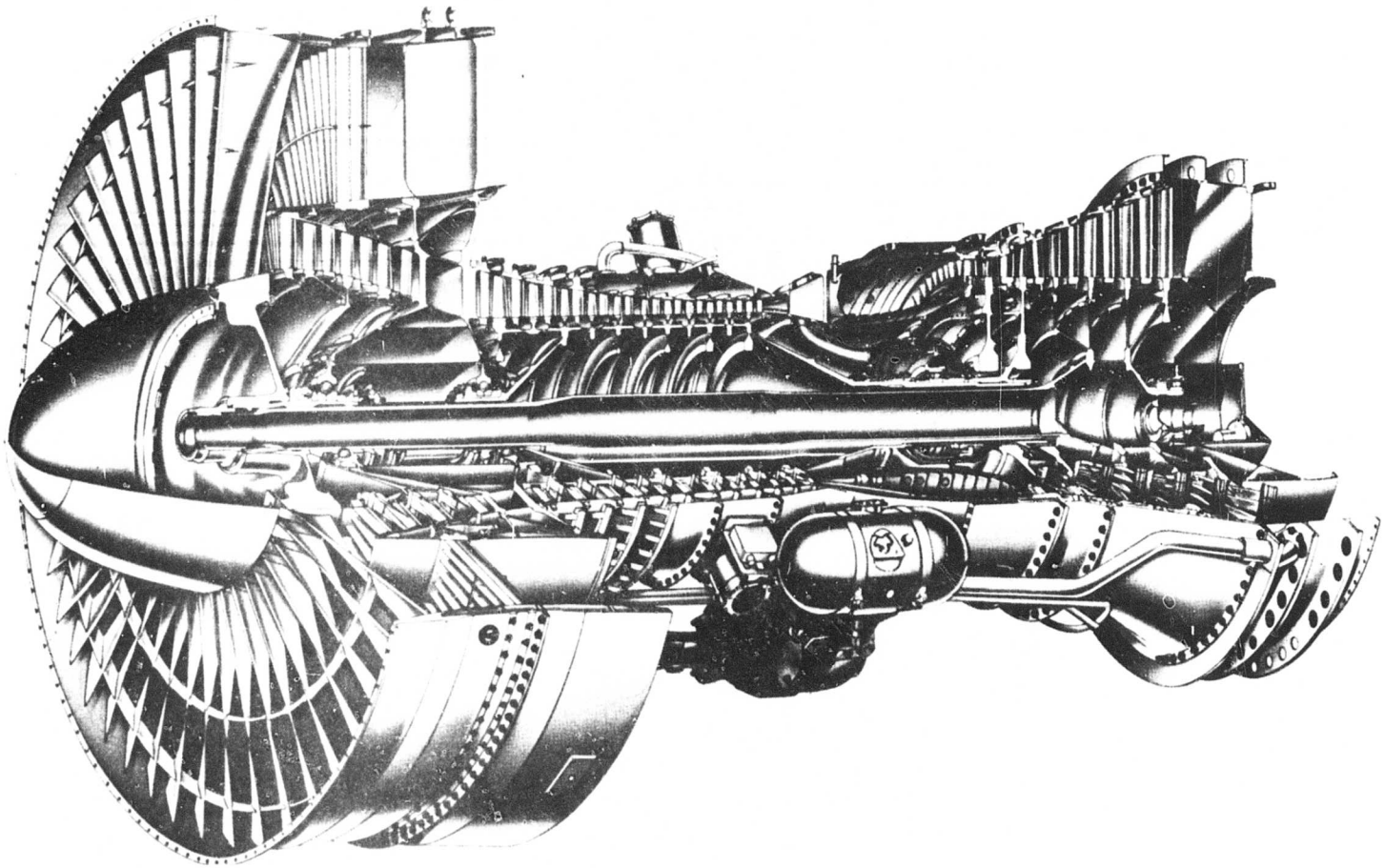

Figure 5. P&WA JT9D Engine Cross Section.

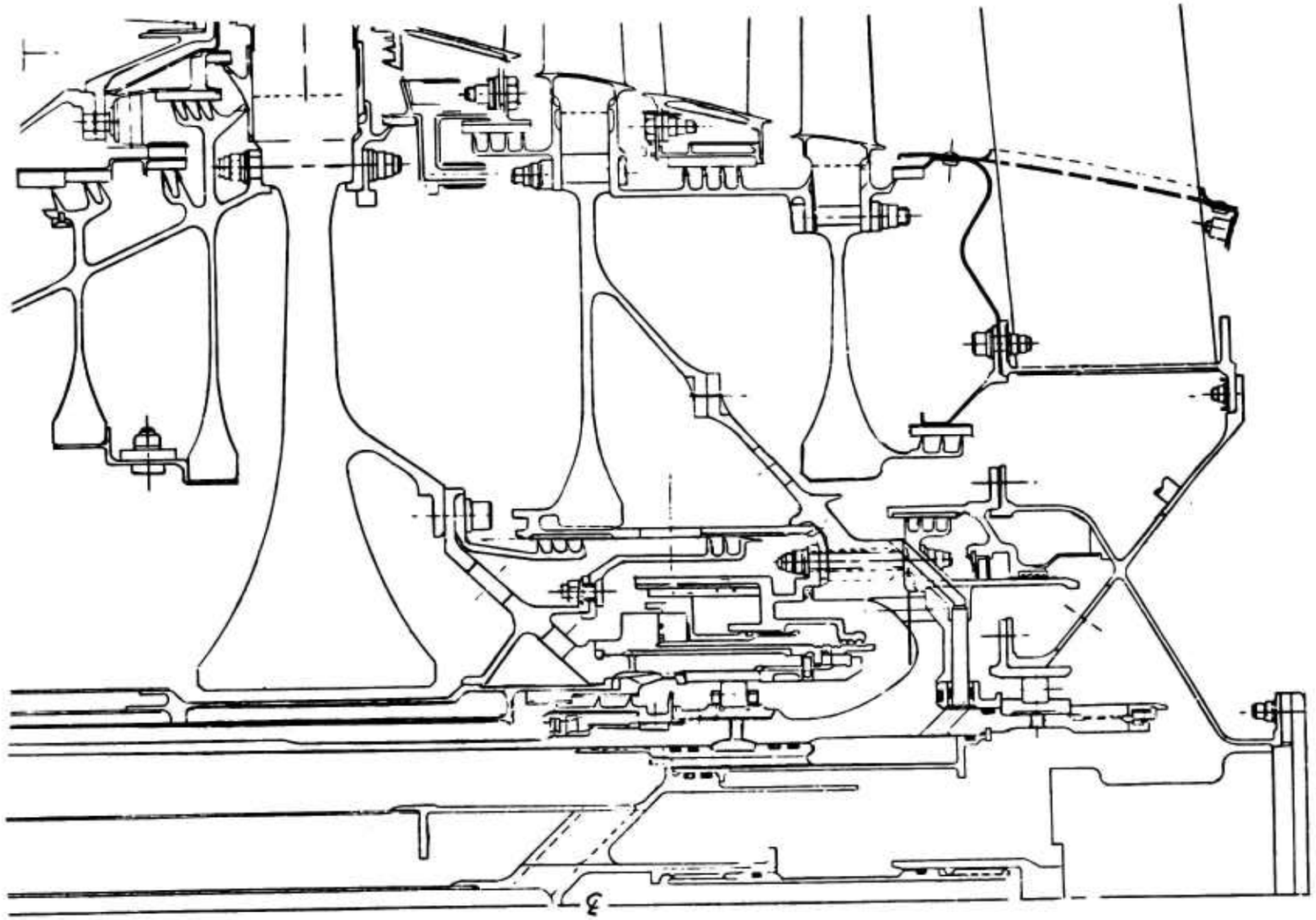

Figure 6. GE F100 Face-Type Differential Carbon Seal Arrangement.

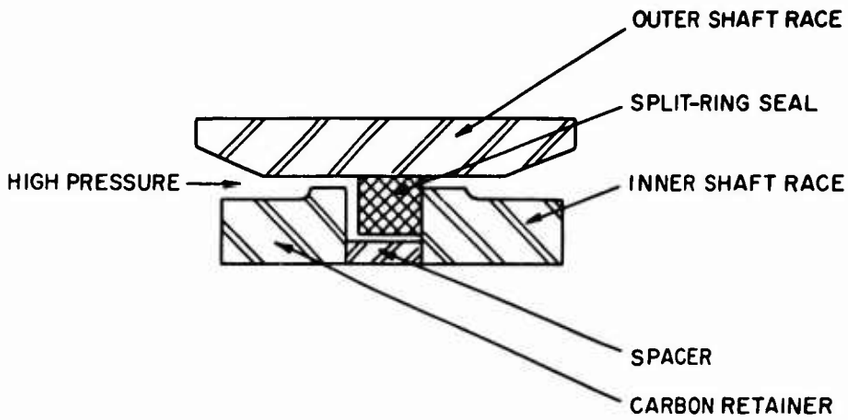

Figure 7. Split-Ring Intershaft Seal Components.

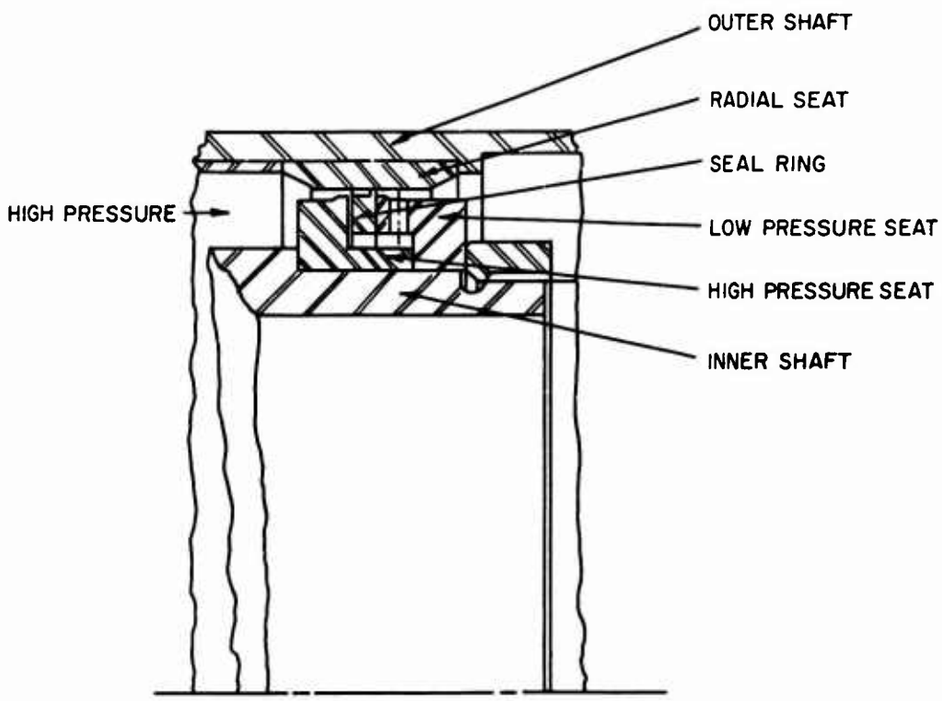

Figure 8. Force-Balanced Split-Ring Seal.

REVIEW OF EXISTING SMALL ENGINES (PHASE II)

A thorough review was conducted of various aspects of bearings and seals for a large number of small turbojet and turboshaft engines. This review is summarized in Table II which shows the following:

1. Both labyrinth and carbon seals have been employed by various companies.
2. The number of sumps used ranges from the minimum of 2 to as many as 5.
3. The number of bearings on two-shaft engines varies from the minimum of 4 to as many as 7.
4. Most engines place the HP ball bearing in the compressor inlet sump presumably because of a cooler environment.
5. Most current small engines use jet oil lubrication.
6. A few engines employ underrace lubrication for lubrication and cooling.
7. About 50% of the engines listed employ some form of squeeze-film oil damping or bearing support flexibility.
8. DN's as high as 2.2×10^6 are used in small engine design.

TABLE II. CURRENT SMALL ENGINE BEARING AND SEAL ARRANGEMENTS

Airflow (lb/sec)	Drive Location	No. Bearings HP	No. Bearings LP	Highest DN Ball	Highest DN Roller	HP Thrust Bearing Location	Type Bearing Supports	Type Lubrication	No. of Sumps	Type Seals
5.8	Front	2	-	e		Comp. Inlet	Flexible [d]	Jet	2	Carbon
5.8	Rear	2	2	e		Comp. Inlet	Hard	Jet	2	Carbon
2.0	Front	2	-	e		Comp. Exit	-	-	2	-
3.0	Front [a]	3	2	e		Comp. Exit	Hard	Jet	3	Labyrinth
33.0	Front	4	-	e		Comp. Exit	Hard	Jet	3	Carbon & Labyrinth
11.1	Rear	4	2	e						
44.0	b	3	-	e		Comp. Inlet	Hard	Jet	2	Labyrinth
84.0	b	2	-	e		Comp. Inlet	Hard	Underrace	2	Labyrinth
20.0	b	2	-	e		Comp. Inlet	Flexible [d] Oil Damped	Jet	2	Carbon
3.3	Rear	4	2	e		Comp. Mid	Flexible [d] Oil Damped	Jet	3	Carbon
6.0	Front	3	4	e		Comp. Inlet	Flexible [d] Oil Damped	Jet	3	Carbon
12.7	Rear	3	2	1.2	1.43	Comp. Exit	Hard	Jet	4	Carbon & Labyrinth
25.0	Front	3	4	1.45	1.62	Comp. Exit	Hard	Jet & Underrace	3	Carbon
44.0	b	3	-	1.24	1.32	Comp. Exit	Hard	Jet	2	Carbon

a. Gear train from middle of engine
b. These are small turbojets
c. 3 shaft engine
d. Some supports hard, some flexible
e. Information not available

TABLE II. Continued

Airflow (lb/sec)	Drive Location	No. Bearings HP	No. Bearings LP	Highest DN Ball	Highest DN Roller	HP Thrust Bearing Location	Type Bearing Supports	Type Lubrication	No. of Sumps	Type Seals
9.5	Front	3	4	1.8	2.15	Comp. Exit	Flexible [d] Oil Damped	Jet	3	Carbon & Labyrinth
22.0	Rear	3	2	e		Comp. Inlet	Hard	Jet	3	Labyrinth
12.8	Front	2	3	e		Comp. Inlet	Flexible [d] Oil Damped	Jet	3	Carbon
22.0	Front	2	2	e		Comp. Inlet	Hard	Jet & Outer Race	3	Carbon
50.0	b	3	-	e		Comp. Inlet	Hard	Jet	3	Carbon
5.5	Rear	2	2	e		Comp. Inlet	Flexible [d] Oil Damped	Jet	3	Labyrinth
7.2	Front	2 3	3[c]	2.0	2.20	Comp. Inlet	Flexible [d] Oil Damped	Underrace	5	Labyrinth
e	b	2	4	e		Comp. Inlet	Hard	Jet	3	Carbon
57.3	b	2	3	e		Comp. Inlet	Hard	Underrace	2	
6.2	Front	4	-	e		Comp. Inlet	Flexible [d] Oil Damped	Jet	3	Carbon
9.9	Front	4	-	e		Comp. Inlet	Flexible [d] Oil Damped	Jet	3	Carbon
13.4	Rear	4	2	e		Comp. Inlet	Flexible [d] Oil Damped	Jet	4	Carbon

a. Gear train from middle of engine
b. These are small turbojets
c. 3 shaft engine
d. Some supports hard, some flexible
e. Information not available

ADVANCED SMALL ENGINE BEARING AND SEAL CONCEPTS

Bearing and seal arrangements for advanced engines in the 2- to 10-lb/sec airflow size were studied. Basic assumptions were made of the compressor pressure ratio, turbine inlet temperature, combustor length, and the number of compressor and turbine stages that might be used in advanced engines. These assumed design criteria are presented in Table III. For all cases, a front drive was assumed on the basis that this would result in the highest HP rotor bearing DN's and thus present the most difficult design problem. This assumption was also made on the premise that it would be a relatively simple matter to convert a front-drive to a rear-drive turboshaft engine.

TABLE III. DESIGN CRITERIA

Design Criteria	Engine Airflow (lb/sec)		
	2	5	10
Compressor Pressure Ratio (P_3/P_3)	10	15	17
Turbine Inlet Temperature (T_4), °F	2200	2400	2500
Number of Compressor Stages			
Axial	1	2	2
Centrifugal	1	1	1
Combustor	Reduced Axial Length	Reduced Axial Length	Reduced Axial Length
Number of Turbine Stages			
HP	1	1	1
LP	2	2	2
Drive Location	Front	Front	Front

Based on the preceding guidelines and the objective of achieving the same degree of mechanical simplicity as in large, advanced engines, conceptual drawings were made of two-sump turboshaft engines in the 2-, 5-, and 10-lb/sec airflow size. These are shown in Figures 9, 10, and 11. Figures 9 and 10 show a sump and bearing arrangement very similar to that in the GE F100 turbofan engine, which utilizes a differential roller bearing to support the aft end of the HP rotor. Figure 11 shows an alternate arrangement of the 2-lb/sec size with the aft sump between the HP and LP turbines. In this latter concept, the HP rotor aft roller bearing does not operate differentially.

Table IV lists the various bearing and seal design parameters for the arrangements studies. In the case of the 5-lb/sec size, the engine was scaled diametrally by $(\text{airflow})^{1/2}$ from the GE12 airflow. This results in a HP rotor speed of 59,500 rpm. At 2 lb/sec, the HP rotor speed scaled in this fashion would have been 95,500 rpm, with an LP shaft speed of 51,300 rpm. These speeds, however, were believed to be too high to be practical. Also, the space available for the front HP bearing was believed to be too restricted. Consequently, the aero design of the compressor and turbine was adjusted for the reduced speeds of 75,000 and 42,100 rpm for the HP and LP rotors, respectively. Table IV lists the bearing and seal parameters for this 2-lb/sec engine. This latter configuration is shown in Figures 10 and 11.

One important factor in the successful operation of advanced, two-sump, two-shaft engines is designing the LP shaft to operate well below the first bending critical speed. This was very thoroughly analyzed for the 2-lb/sec configuration shown in Figure 10, using the GE VAST computer program. Using the VAST model shown in Figure 12, the critical speeds excited by the LP and HP turbine rotors were determined to be as shown in Figure 13. The following will be noted from Figure 13:

1. The first and second LP rotor translation criticals occur below the maximum speed of 42,160 rpm; operation near translation modes can be accommodated by use of squeeze-film oil damping and flexible bearing supports.

2. The third critical (of the LP shaft first bending) occurs at 64,506 and 56,186 rpm as excited by the LP and HP rotors, respectively.

   With a maximum LP speed of 42,160 rpm, there is 33% margin to the 56,186 rpm first bending critical as excited by unbalance in the HP rotor. This margin is greater than the 20% normally used by the GE Co. as a design criterion and, thus, is more than adequate.

TABLE IV. BEARING AND SEAL DESIGN PARAMETERS

Design Parameter	Engine Airflow (lb/sec)		
	2	5	9.1
Rotational Speeds (rpm)			
HP Rotor	75,000	59,500	44,700
LP Rotor	42,100	40,429	26,500
Shaft Diameter (in.)			
HP Front Bearing	1.6	1.4	1.88
HP Rear Bearing	1.48	1.04	1.36
LP Front Bearing	1.4	1.2	1.62
LP Rear Bearing	1.48	1.04	1.36
Rotor Spans (in.)			
HP Rotor	9.96	12.9	16.66
LP Rotor	13.37	18.6	24.66
Polar Moment of Inertia (lb/in^2)			
HP Rotor	15.66	47.9	197
LP Rotor	28.57	48.9	201
Rotor Weight (lb)			
HP Rotor	8.26	18.9	43.6
LP Rotor	9.47	10.0	23.2
Rotor Thrust (lb)			
HP Rotor	128	124	175
LP Rotor	119	114	186
Seal Air Pressure (psia)			
HP Front Seal	20.7	31.1	31.1
HP Rear Seal	20.7	31.1	31.1
LP Front Seal	14.7	14.7	14.7
LP Rear Seal	14.7	29.4	29.4
Seal Air Temperature (°F)			
HP Front Seal	163	235	235
HP Rear Seal	179	238	238
LP Front Seal	60	60	60
LP Rear Seal	60	270	270
Bearing DN/10^6			
HP Front Bearing	3.05	2.13	2.13
HP Rear Bearing	1.23	0.50	0.63
LP Front Bearing	1.50	1.23	1.09
LP Rear Bearing	1.58	1.07	0.92

While shaft dynamics analyses were not conducted for the various engines in the 2- to 10-lb/sec size, it is concluded based on the preceding analysis that the two-sump arrangement can be used on advanced 2- to 10-lb/sec turboshaft engines. The biggest obstacle in achieving this configuration is the high DN required at the compressor forward bearing.

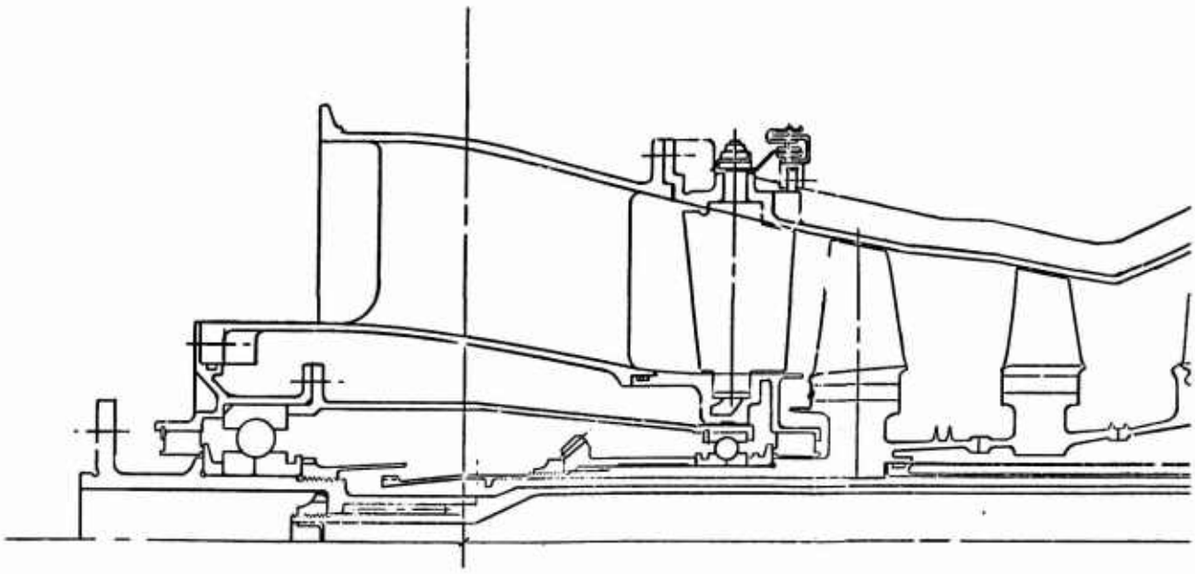

Figure 9. Bearing and Seal Arrangement for a Typical 5- to 10-lb/sec Advanced Small Turboshaft Engine.

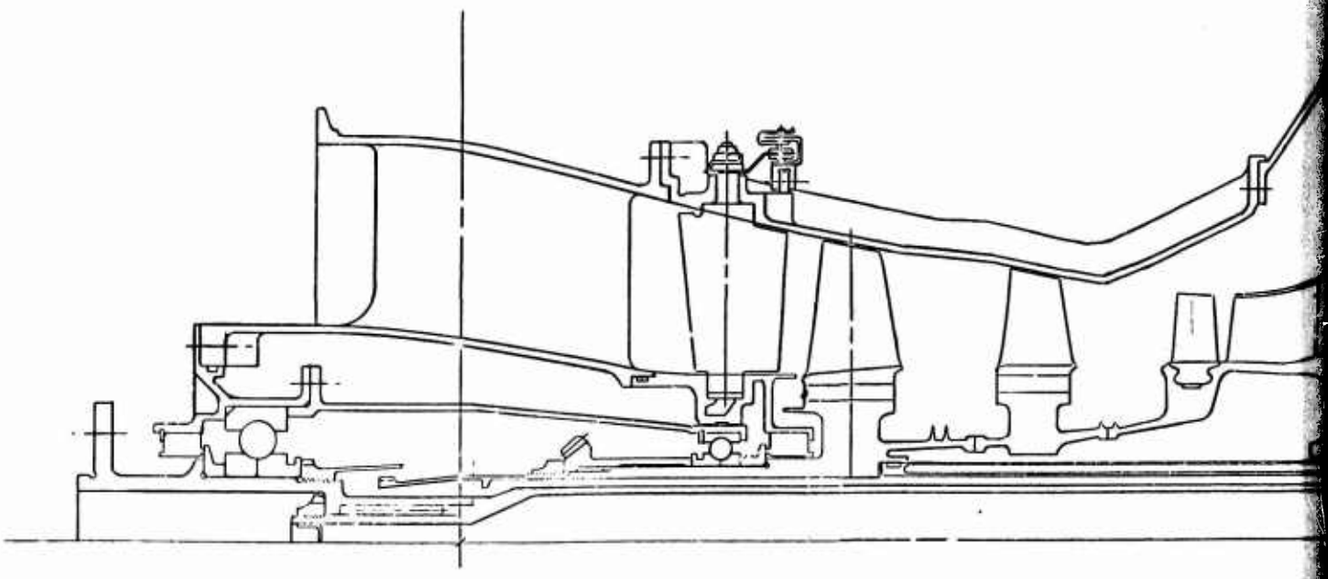

Figure 9. Bearing and Seal Arrangement for a Typical 5- to 10-lb/sec Advanced Small Turboshaft Engine.

1 B

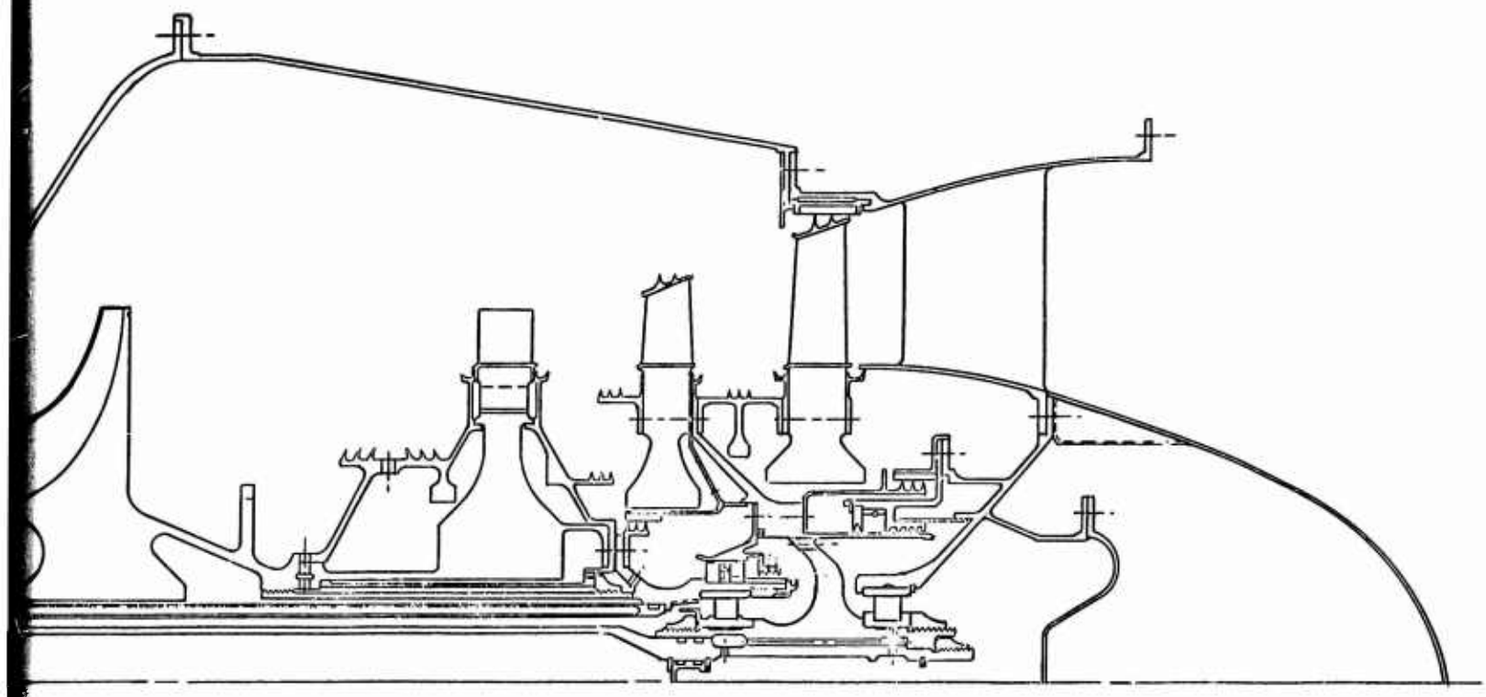

A

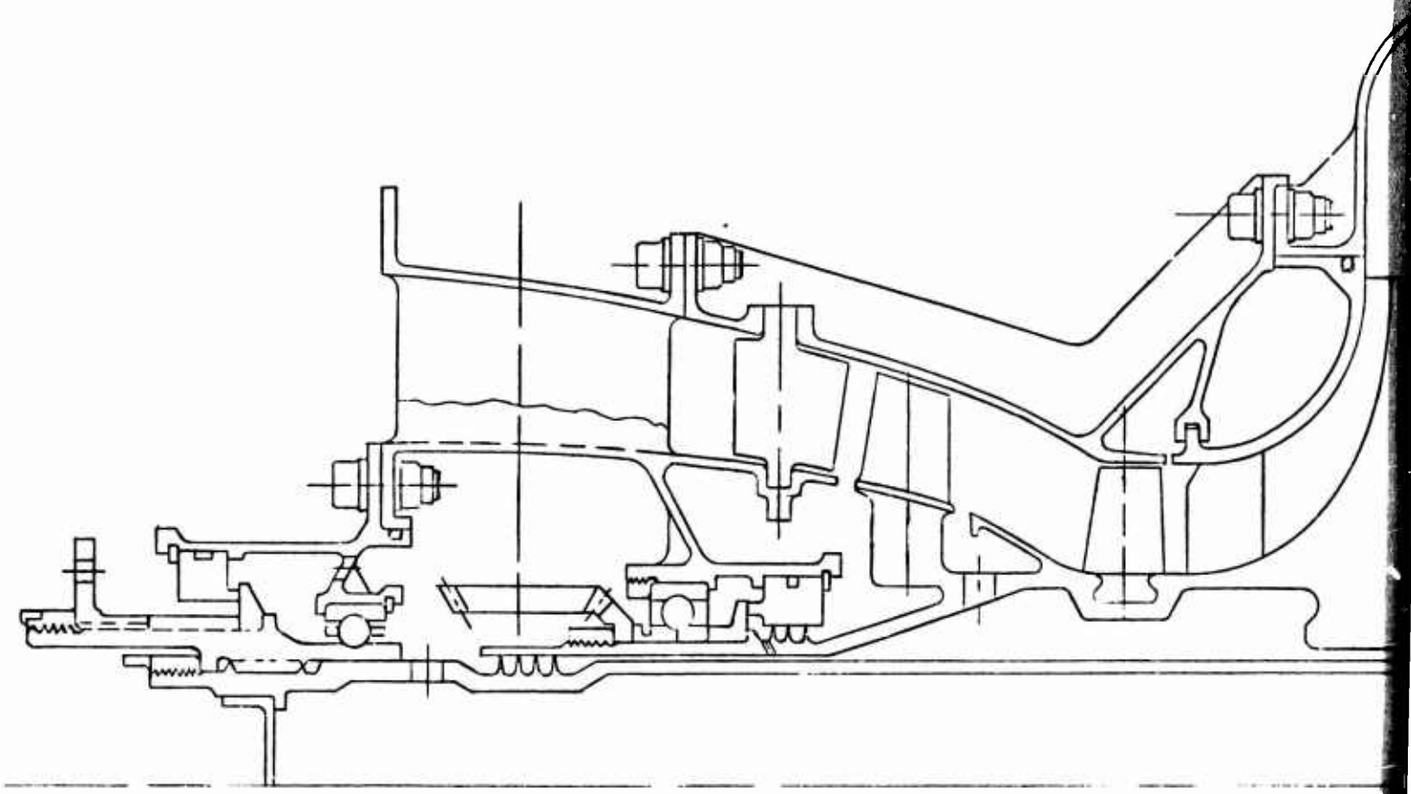

Figure 10. Bearing and Seal Arrangement for a 2-lb/sec Small Turboshaft Engine - Front Drive, 4 Bearings.

PRECEDING PAGE BLANK

1 B

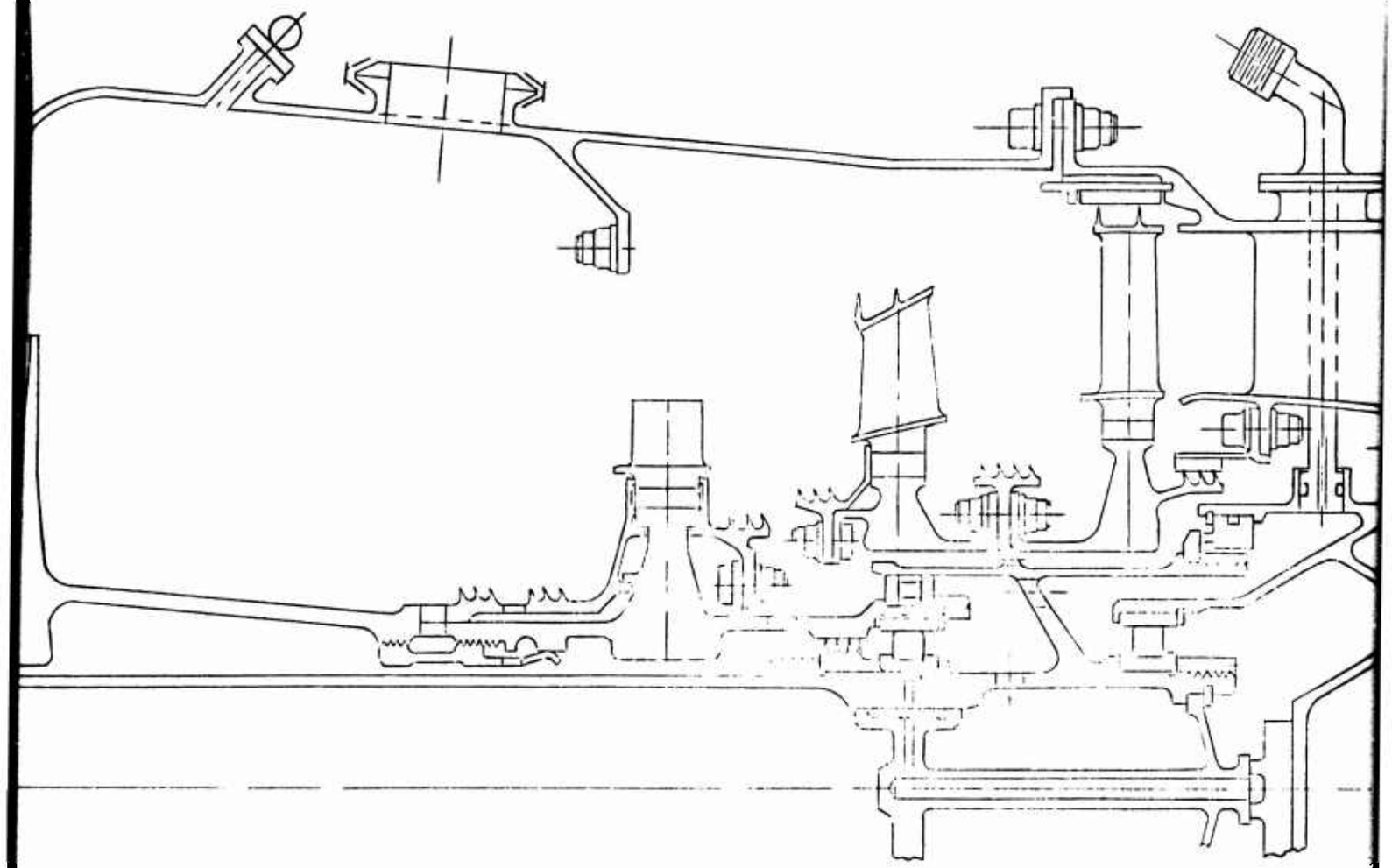

1c

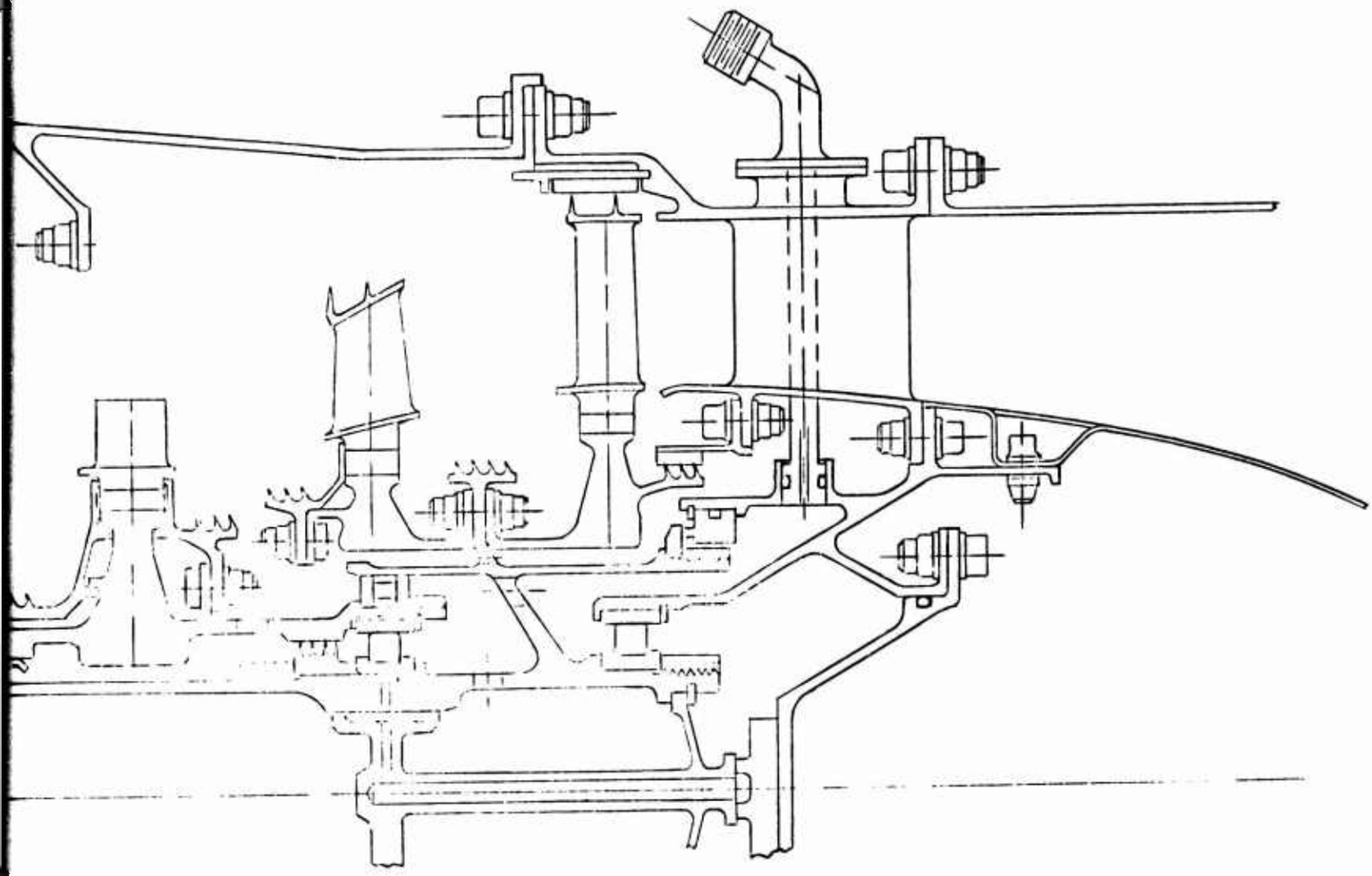

A

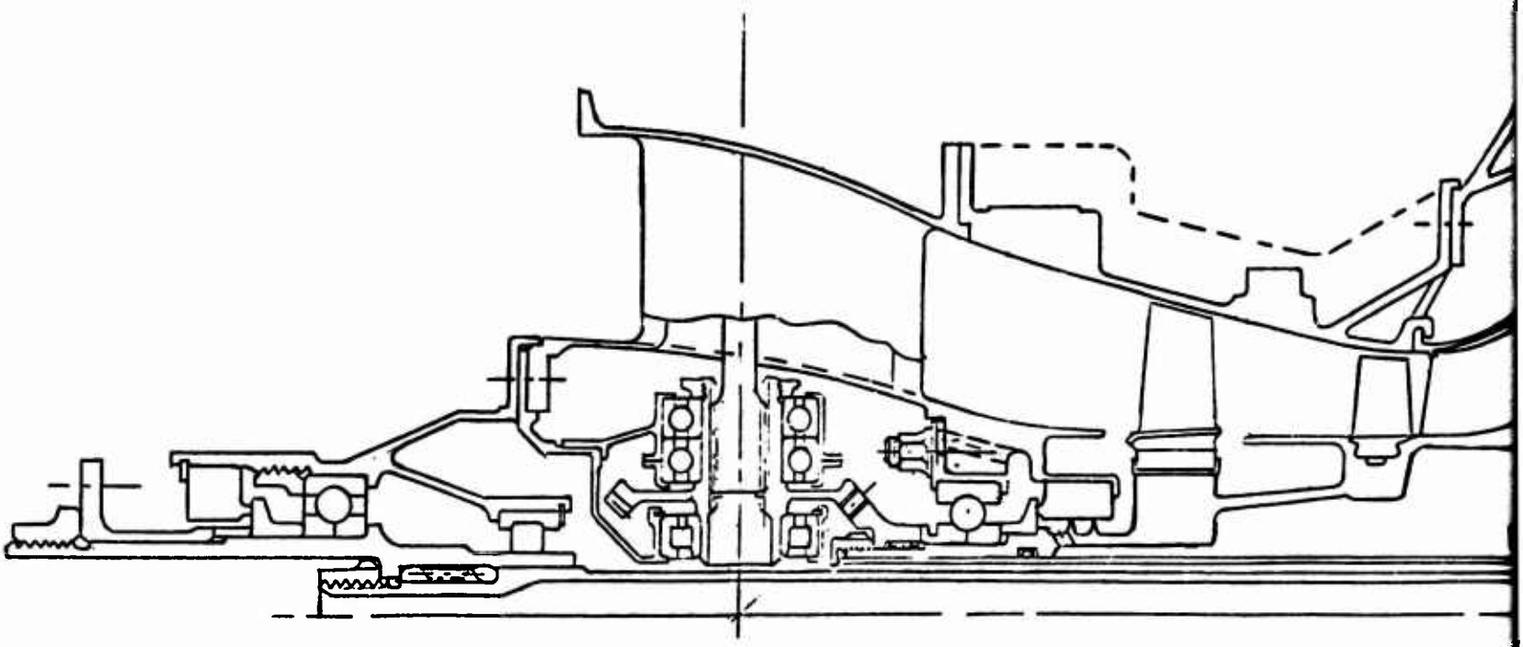

Figure 11. Bearing and Seal Arrangement for a 2-lb/sec Small Turboshaft Engine - Front Drive With Aft Sump Located Between the High- and Low-Pressure Turbines.

BLANK

PAGE

1 B

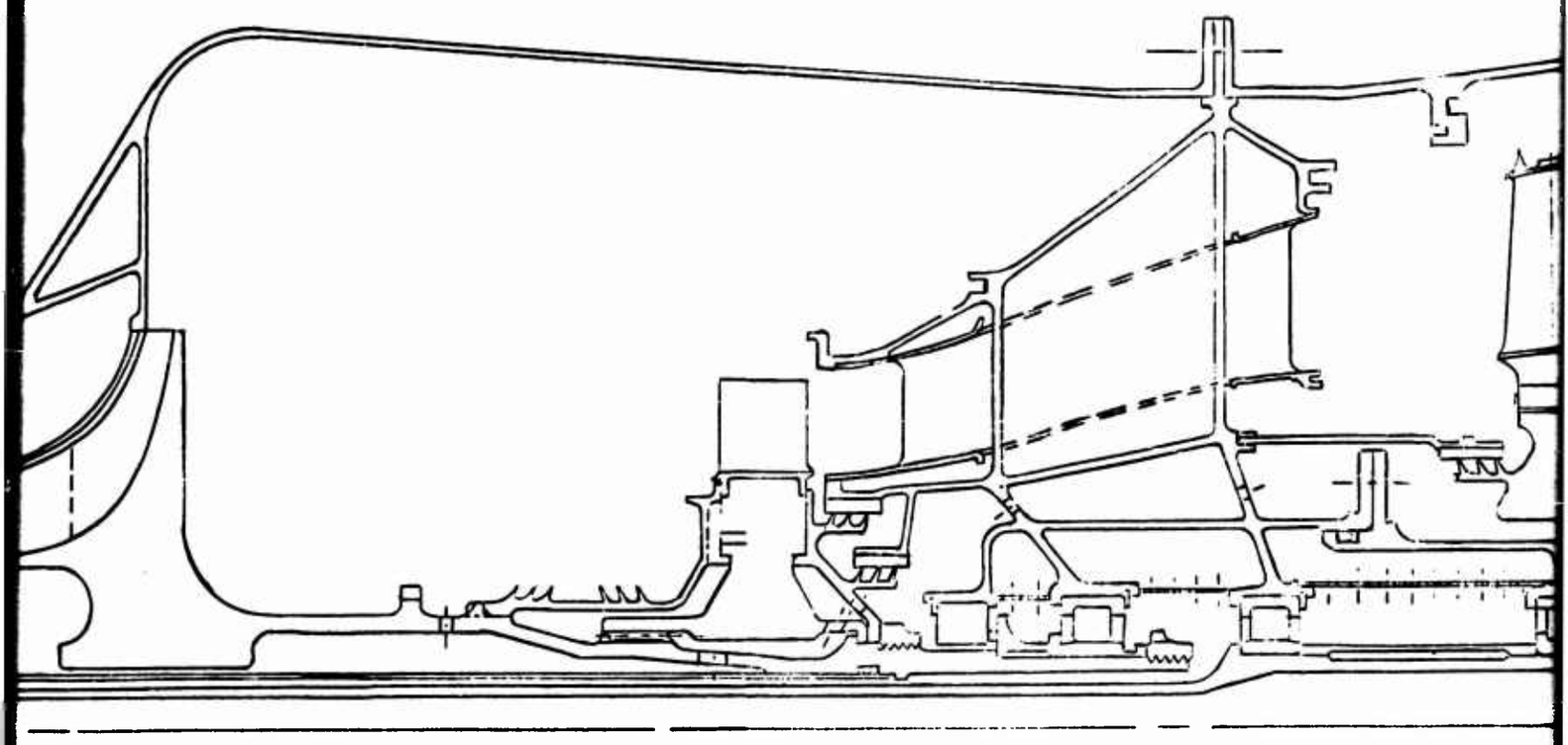

1 C

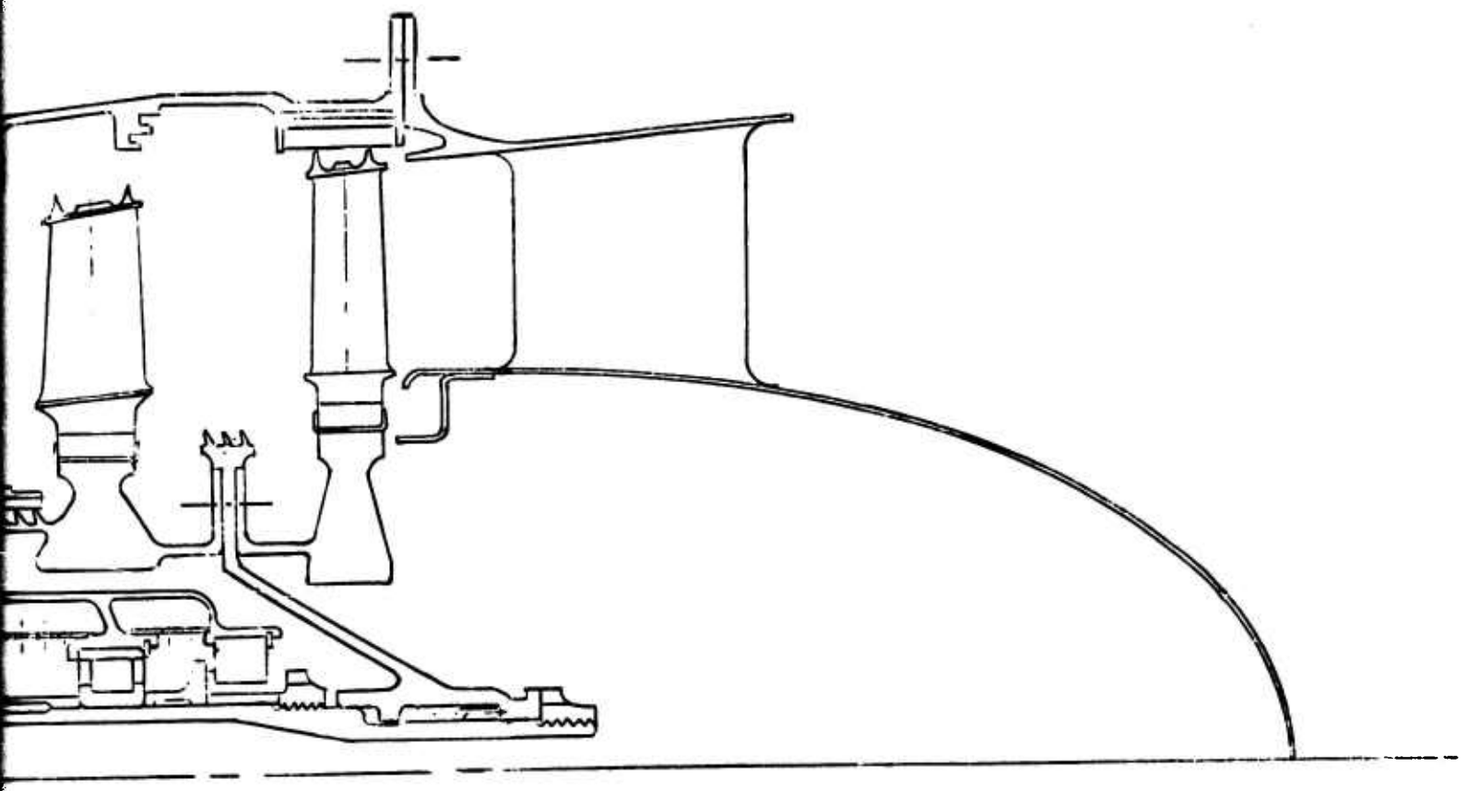

PRECEDING PAGE BLANK

BLANK PAGE

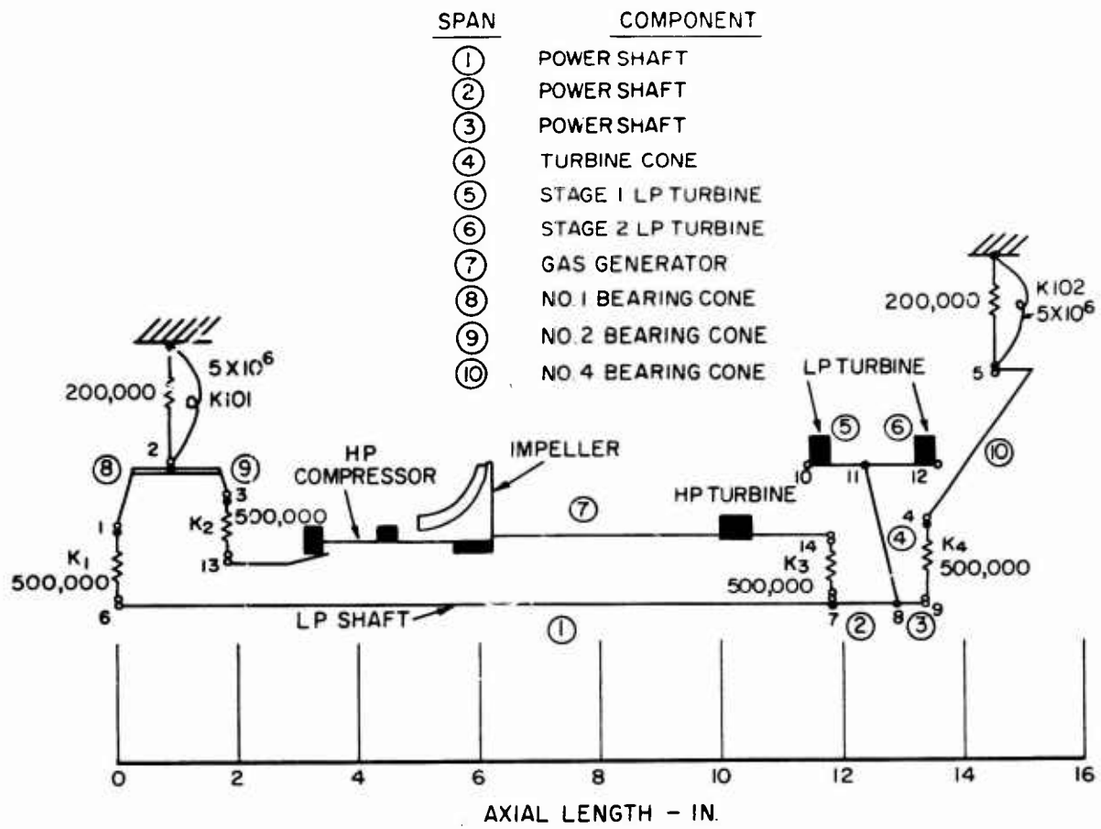

Figure 12. VAST Model for a Front Drive, 2-lb/sec Shaft Engine.

PRECEDING PAGE BLANK

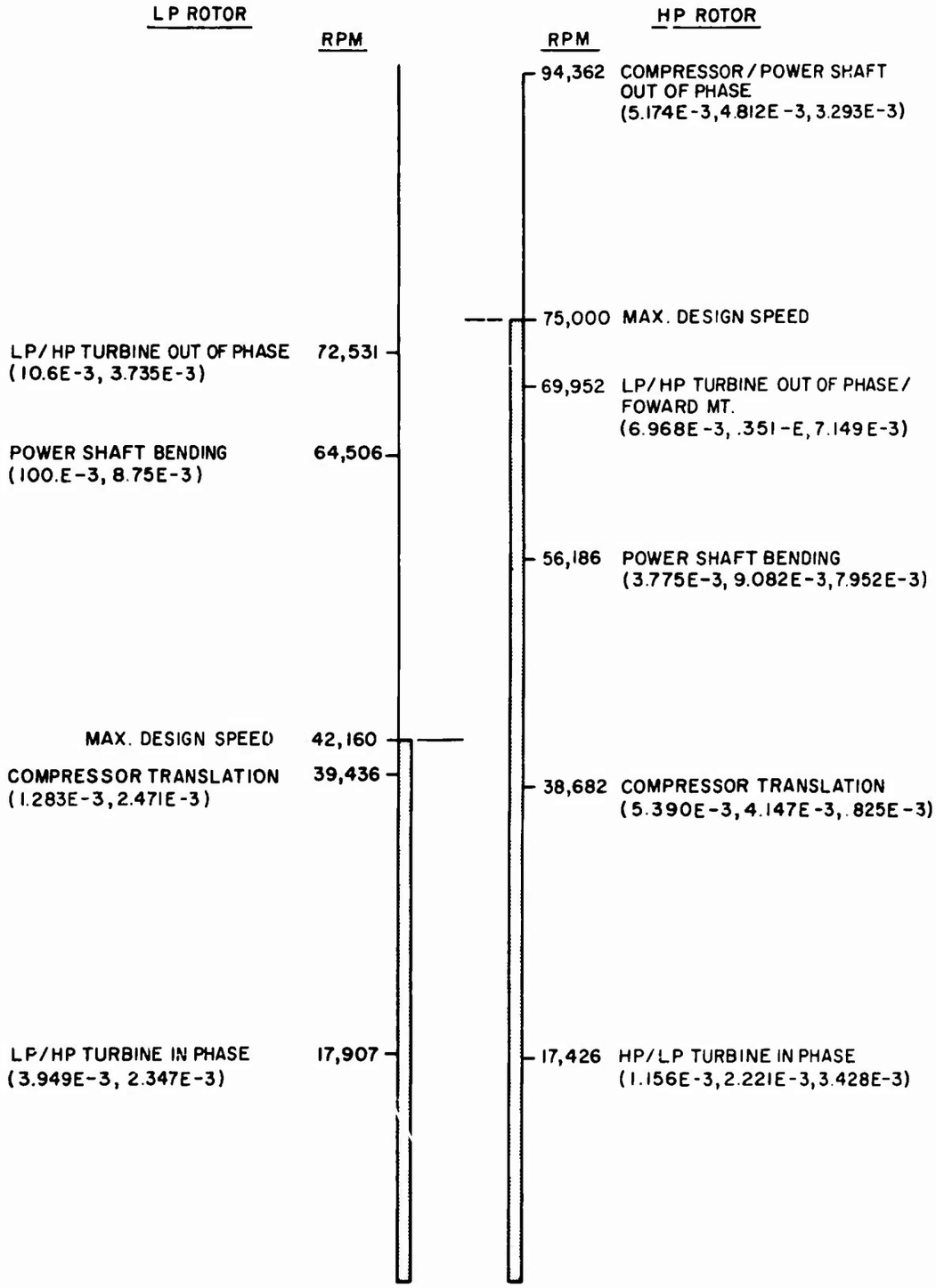

Figure 13. VAST Vibration Analysis for a 2-lb/sec Shaft Engine.

SCALABILITY (PHASES III AND IV)

From the parameters established in Phase II for 2- to 10- lb/sec size advanced engines, analyses were conducted on various aspects of small, high speed bearings and shaft seals. The most significant results of these analyses, documented in GE Report R70AEG421 * follow.

BEARINGS

As was shown in Phase I for large engine ball bearings, the calculated B_{10} fatigue life (without a multiplier for M50 material) falls well below 100 hours as DN approaches 3×10^6. Illustrated in Figure 14, the HP ball bearing in the 2-lb/sec engine studied in Phase II would have a calculated B_{10} life of only 25 hours at a DN of 3×10^6. Even with a multiplier of 5 for M50 material, the fatigue life is believed to be inadequate.

To achieve satisfactory bearing life, a calculated B_{10} life of at least 100 hours (without M50 multiplier) is deemed necessary. Referring to Figure 15, a B_{10} life of 100 hours for the 2-lb/sec engine ball bearing could be achieved by reducing the DN from 3×10^6 to 2.5×10^6. This would require a reduction in the HP shaft diameter from 1.6 in. to 1.3 in., which is believed possible. This decrease would require a similar reduction in the diameter of the LP shaft just as it passes under the HP ball bearing. In view of the large (33%) margin between maximum speed and the first bending critical as presented in the Phase II discussion, the reduction in the diameter of the LP shaft near its forward support should be feasible.

The effect of co-rotation versus counterrotation on the calculated B_{10} life and cage stresses in differential roller bearings was also examined. Figure 16 shows that for the 9.1-lb/sec engine, the B_{10} life (without M50 multiplier) would be 180 hours versus 27,000 hours at an HP ball bearing DN level of 2.5×10^6. This large increase in B_{10} life is the result of very low centrifugal forces between the rollers and outer race due to the much lower speed of the cage and rollers with counterrotation. This lower cage speed will also reduce cage hoop stress. Counterrotation of the shafts cannot be used, however, unless the problem associated with the very high differential seal speed can be solved.

---

* Perkins, P.A.; Pope, A.N.; Moore, C.C.; BEARING AND SEAL SCALABILITY - SMALL ENGINE TECHNOLOGY, General Electric Company, R70AEG421, November 5, 1970.

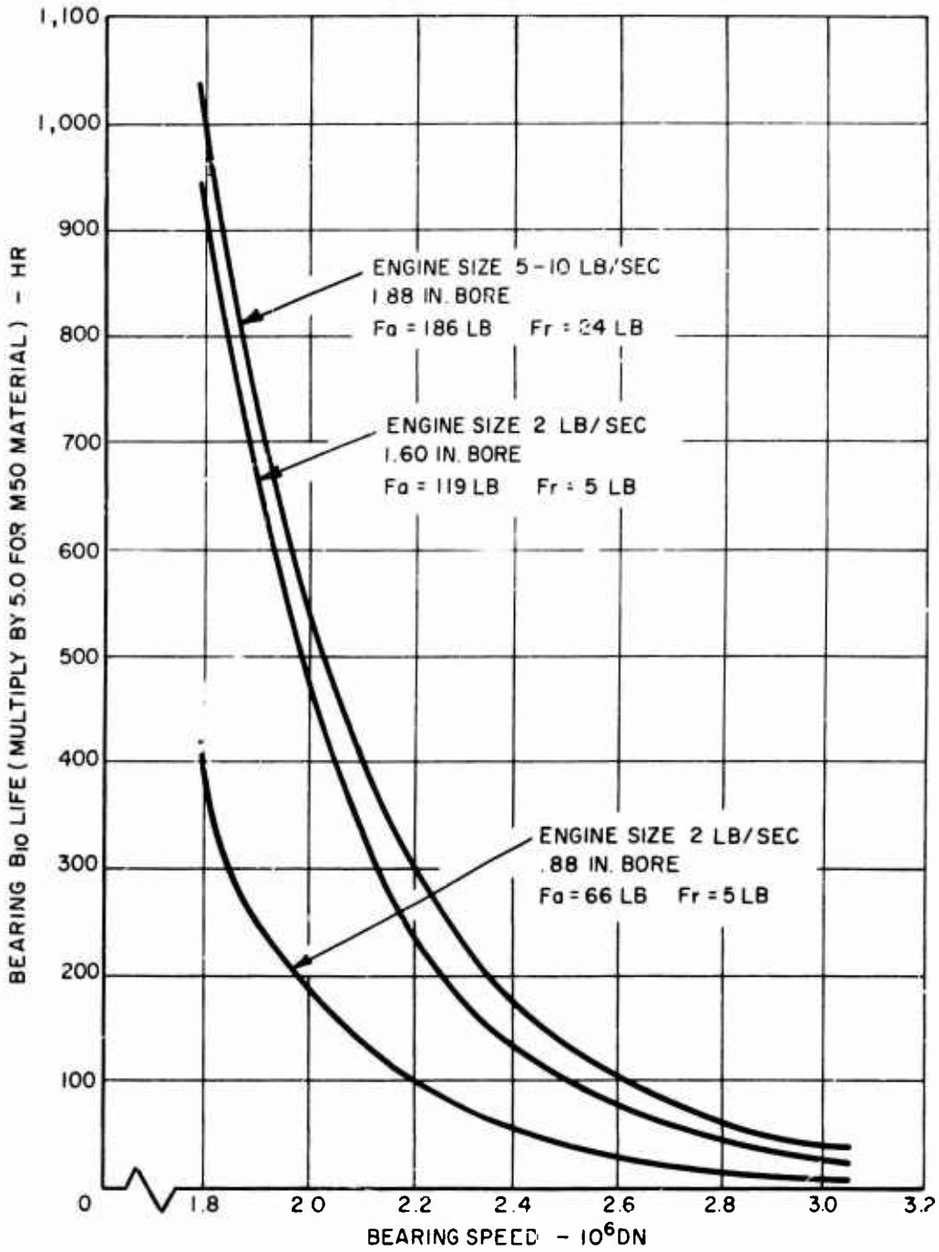

Figure 14. Ball Bearing Fatigue Lives at Various Speeds.

BLANK PAGE

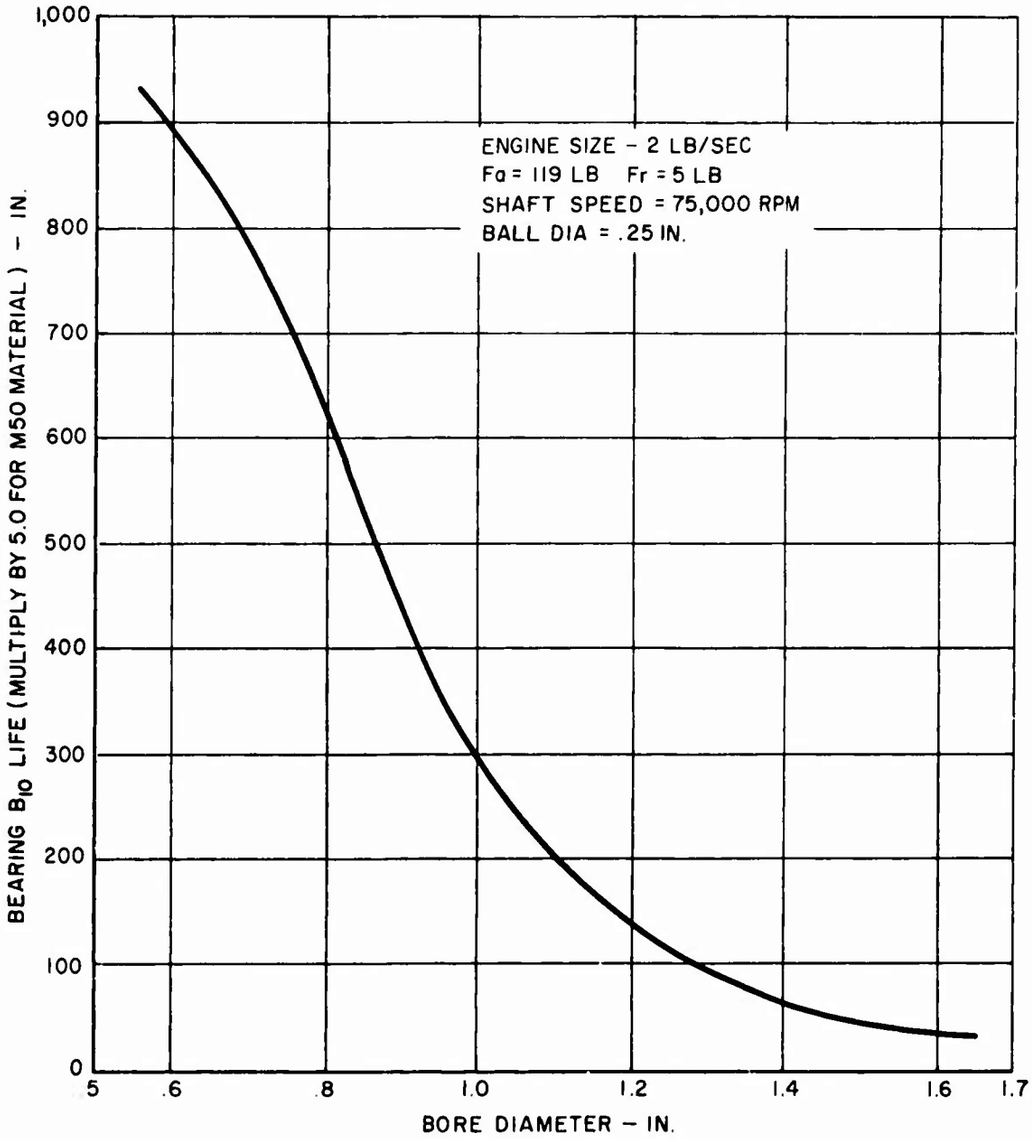

Figure 15. Ball Bearing Fatigue Lives for Various Bore Sizes.

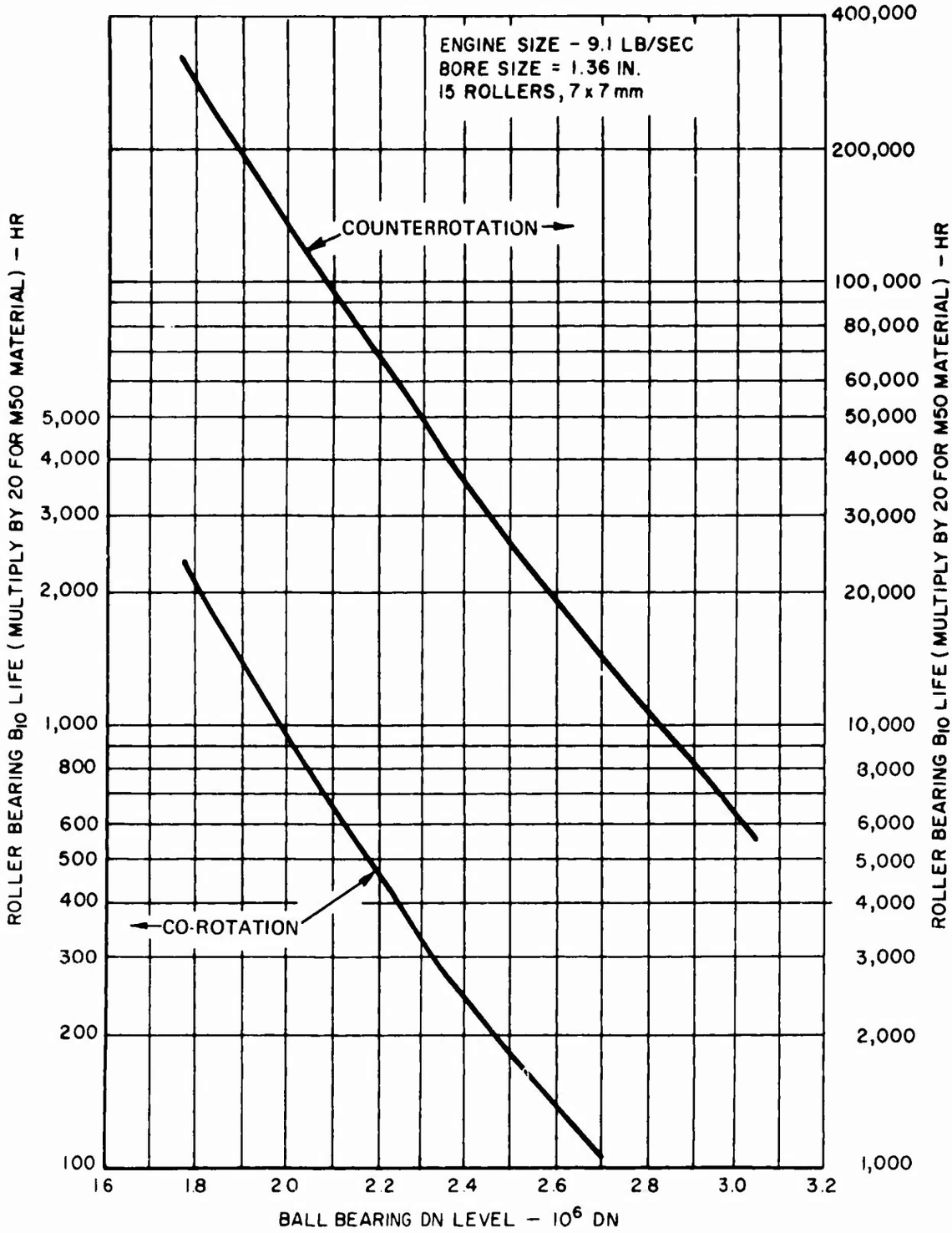

Figure 16. Rotation Effect on Intershaft Bearing Life.

The equation used to calculate bearing power loss and heat generation is:

$$Q = 42.5 \times 10^{-6} \; DN \left(10^{-8} \; CN + 1.64 \; U^{.25} W^{.4} + .000286 \; P\right)$$

where Q = heat generation, Btu/min

D = bearing bore diameter, mm

N = shaft speed, rpm

C = basic load rating, lb

U = lubricant viscosity, centipoise

W = oil flow through bearing, gal/min

P = equivalent load, lb

This equation has been found to be reasonably accurate for bearing bore sizes over 100 mm and for DN values up to 2.2×10^6; however, the equation has been found to be inaccurate in evaluating the power loss in small, high speed bearings such as would be used in the 2- to 10-lb/sec size engines. For example, during components testing of the gas generator bearings of the GE12 engine, heat generated was only about 1/3 of that predicted by use of the above equation.

Another aspect of ball bearings that does not scale well is ball mass. As shown in Figure 1, the calculated B_{10} life of large bearings at DN's near 3×10^6 can be increased by decreasing ball diameter and weight. This is also true of small bearings, as shown in Figure 17 for a particular diameter and speed. However, in the case of a small bearing, the ball weight can only be reduced by a limited extent because of physical limitations. In the case of large bearings, ball weights can be greatly reduced by using hollow balls and drilled balls, techniques that will be difficult, if not impossible, to employ with small bearings.

SEALS

As presented in Table IV, the seal pressures and temperatures in the configurations studied are well below the circumferential carbon seal limit of 80 psi and 750 F. The highest rubbing speed would occur in the front-drive 2-lb/sec engine. If the bearing bore is 1.6 in., assuming that the seal is 1/4 in. larger, the rubbing speed at 75,000 rpm would be 36,200 ft/min.

Even if the bearing bore is reduced to 1.3 in. to achieve a DN of 2.5×10^6, the rubbing speed would be 30,400 ft/min which is still well above the 25,000 ft/min capability of circumferential carbon seals. It is clear that either labyrinth or face-type carbon seals must be used on the HP rotor of advanced, small engines as configured in this study.

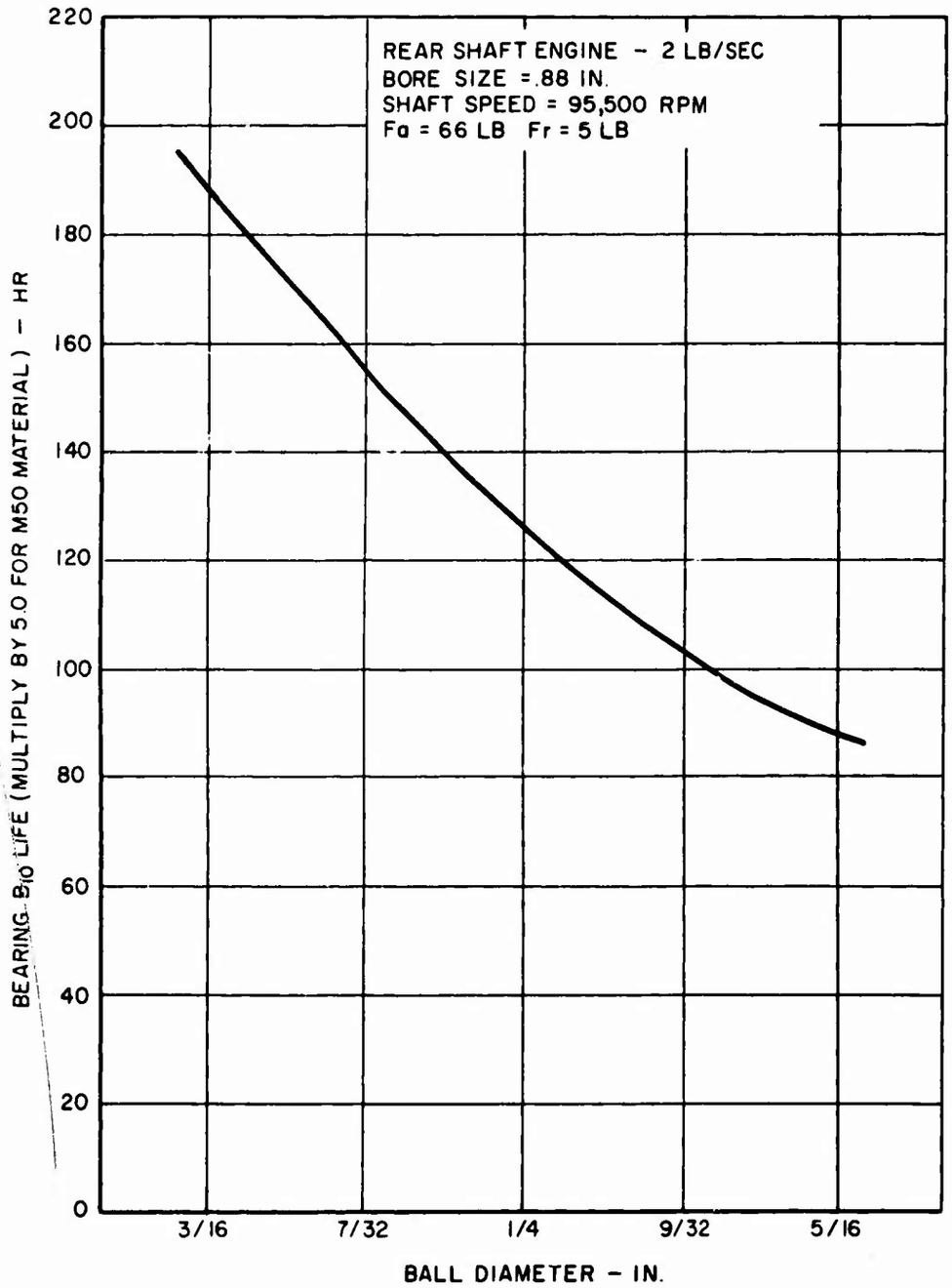

Figure 17. Effect of Ball Diameter on Fatigue Life.

Since labyrinth seals are available and well accepted seals as such should not be a barrier problem in the design of advanced small engines. Because of very high speeds, labyrinth seals are being used on the HP rotors of the GE12 and P&WA JT8D and JT9D. The latest airbus large engines, the GE CF6 and Rolls-Royce RB211, use labyrinth seals on both the HP and LP shafts. The problem with labyrinth seals, of course, is higher oil consumption due to higher leakage of air into the sumps and thence overboard through the air/oil separator. For small engines, the seal leakage becomes disproportionately high because seal clearances cannot be scaled from large to small engines. For example, the TF39 engine operates with labyrinth seal radial clearances of 7 to 12 mils while the GE12 operates with labyrinth seal clearances of 3 to 5 mils.

Another seal parameter that does not scale well due to manufacturing capability is runout of the seal runner. While the runout in small engines will be lower than that in large engines, the runout will not scale directly with size. The importance of this is shown in Figure 18 which presents the effect of speed and runout on the inertia force to which the circumferential carbon segments are subjected. At the low speeds of large engines, the inertia forces are practically nonexistent. However, at the very high speeds of small engines, inertia forces are very high, particularly at the runouts that may exist. These high inertia forces will add to the normal forces due to the pressure and garter spring and may cause a significant reduction of carbon seal life. The same problem exists with runouts of face-type carbon seals as shown in Figure 19.

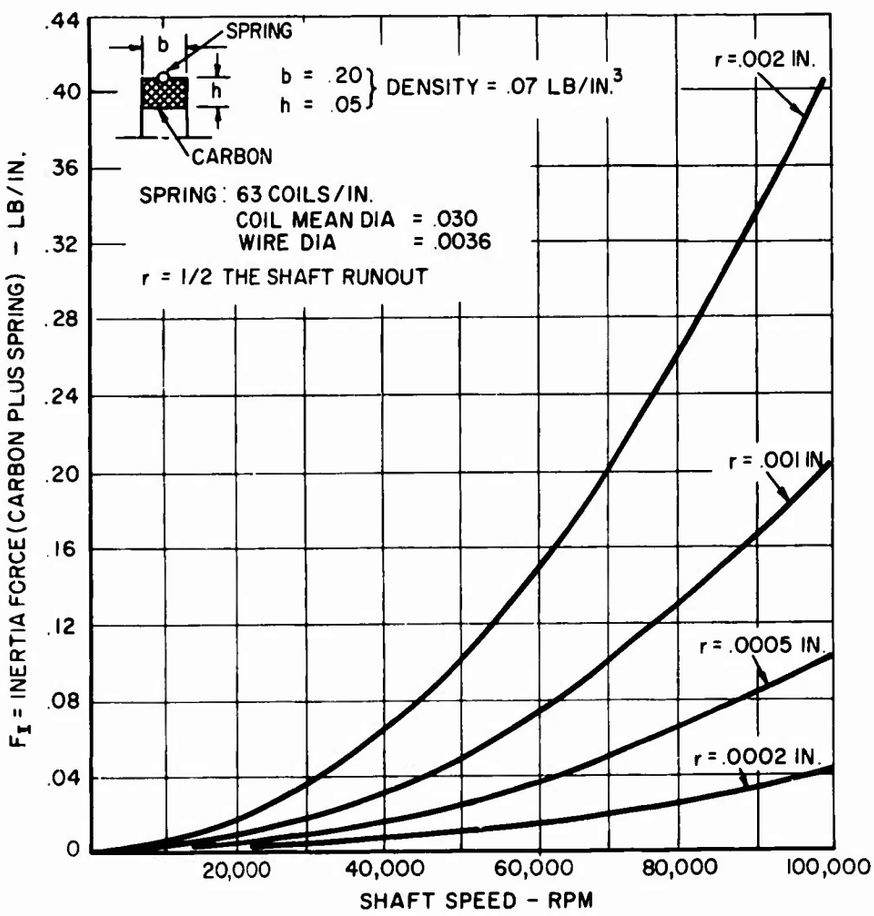

Figure 18. Inertia of Carbon Seal Ring Assembly vs Shaft RPM.

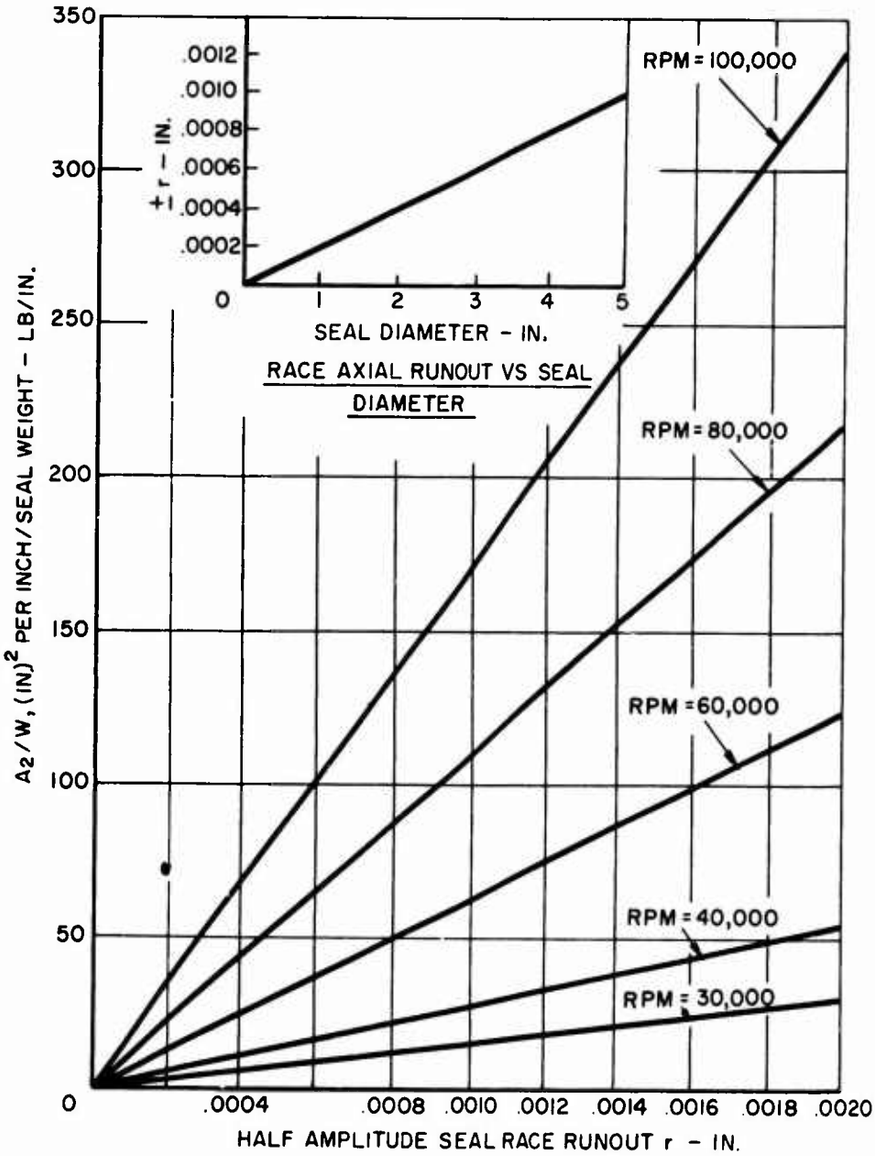

Figure 19. Face Rubbing Seal Area and Weight for a 2.0-psi Specific Load Due to Runout Inertia.

RECOMMENDED TEST PROGRAMS

BEARINGS

It is quite clear that the most serious obstacle to the achievement of simple mechanical arrangements in small, advanced engines is the potentially low fatigue life of the HP rotor thrust ball bearing at DN's approaching 3×10^6. This problem is much more serious in the 2- to 10-lb/sec size advanced engines than in large engines because concepts such as the hollow or drilled ball are not adaptable to bearings with very small balls. In the 2-lb/sec engine analyzed in this study, the DN of the HP rotor ball bearing was reduced to 2.5×10^6 to achieve a calculated B_{10} fatigue life of 100 hours without multipliers for M50 material or load factor. If the normal multipliers of 5 for consumable electrode vacuum melted (CEVM) M50 and of approximately 2 for load factor are used, a bearing with a calculated B_{10} life of 100 hours should actually achieve a life of 1000 hours in service. However, a service life of 1000 hours is not adequate for most applications.

The approach which appears to offer the most promise in extending the service fatigue life of small ball bearings is the development of improved bearing materials.

Indeed, the General Electric Company has done a great deal of work along these lines. In one case, a development program, under contract NOw-65-0070-f from BuWeps, Department of the Navy, was conducted on the feasibility of "ausforming" full-scale bearing components and, by life testing, establishing the effects of ausforming on bearing life and reliability. "Ausforming" is a processing technique which consists of mechanically working a steel while the material is in the metastable austenitic condition. In the work done by GE under the BuWeps contract, 207 size (35 mm) ball bearings (7/16-in.-diameter balls) were manufactured with normal CEVM M50 material and with M50 ausformed to 40%, 70%, and 80% deformation; based on the fatigue testing of limited samples of bearings, it was found that all of the ausformed bearings had dramatically higher B_{10} fatigue life than the standard M50 bearings. Indeed, the ausformed bearings processed with 80% deformation had a B_{10} fatigue life 9 times greater than that of standard M50. Applying a multiple of 5 for standard M50 and a multiple of 9 for ausformed M50 would result in an actual B_{10} life of 4500 hours based on the material effect alone for a bearing having a full load calculated B_{10} life of 100 hours.

It is therefore recommended that a systematic verification test program be conducted on ausformed M50 bearings of 35 mm bore diameter, a size likely to be used in a 2-lb/sec advanced engine. The selection of this size also has the advantage that the results would augment the data obtained by GE during the BuWeps-sponsored 35 mm ausformed bearing program.

By fatigue testing a sufficiently large quantity of ausformed bearings at loads, temperatures, and DN's likely to be encountered in advanced 2-lb/sec engines, actual B_{10} fatigue life can be determined and verified. The tests on these ausformed bearings should be conducted with both MIL-L-7808 and MIL-L-23699 oil to provide information on the effects of these oils on B_{10} fatigue life. In addition, tests should be conducted with the oils filtered at various micron levels, such as 3 and 10 absolute, in an attempt to establish the level of fine filtration required for long bearing life.

In view of the inaccuracy of the present power loss equation for small high DN bearings, and in view of the need to improve heat rejection predictions on small, advanced engines, the following tests should be conducted on small ball and roller bearings at DN's of 2 to 3 x 10^6:

1. The actual power loss should be measured to develop a new empirical equation.
2. In view of the limited fuel cooling sinks on small, advanced engines, ways of minimizing bearing power loss should be evaluated. This includes a comparison of jet oil and underrace lubrication.
3. Tests should also be conducted to determine time-to-failure with loss of oil at DN's of 2 to 3 x 10^6 and to evaluate ways of extending operation with loss of oil.

SEALS

Along with very high DN bearings, small advanced two-shaft engines will require the use of seals at speeds above 30,000 ft/min. At these speeds, labyrinth seals can be used. Thus, seals, per se, are not considered to be a barrier problem, however, the high seal leakage will require a high capacity vent system with the attendant higher weight.

An alternative to the use of labyrinth seals is the use of face-type carbon seals which have the potential of operation at speeds above 30,000 ft/min. It is recommended that a test program be conducted to develop a small, high speed face-type carbon seal capable of speeds of 30,000 to 35,000 ft/min. To achieve satisfactory life, this seal may require hydrostatic or hydrodynamic film features as described in Reports R70AEG345 and R70AEG421 (pages 3 and 29). The purpose of these tests would be to assure that adequate life can be achieved at face runouts that will be encountered in small engines.

BEARING AND SEAL TECHNOLOGY NEEDED (PHASE V)

Shaft seals per se are not a barrier problem in small, advanced engines because of the availability of labyrinth seals which are not speed limited. However, as DN values approach 3×10^6, calculated bearing B_{10} life indicates that improvements are necessary. In parallel with the test programs recommended in the previous section, consideration should be given to the following:

1. For the aft sump of a two-sump engine, the use of nonreturn air/oil mist lubrication of the roller bearings should be evaluated in view of the following advantages:

   a. Reduces the cooling load in the fuel oil cooler.

   b. Allows simplification of the aft sump, seals, and vent system.

   c. Eliminates two scavenge lines, thus reducing vulnerability.

2. Although the effect may not be significant in very small sizes, the use of a roller bearing adjacent to the HP ball bearing should be evaluated. This arrangement, used in the large GE TF39 and CF6 turbofan engines and in the small Rolls-Royce RS360 turboshaft engines, offers the following possible advantages:

   a. The life of the high DN ball bearing may be enhanced by using the roller bearing to relieve the ball bearing of radial load. In this way, the internal geometry of the ball bearing may be optimized.

   b. By increasing internal clearances in the ball bearing, the time-to-failure with loss of oil may also be improved.

3. While recognizing that the seal speed would be very high, the use of a differential ball bearing in the aft sump, with counterrotation shafts, should be studied. If the seal speed problem could be solved, counterrotation offers a means of increasing the ball bearing B_{10} life dramatically.

4. Another possible solution to the low fatigue life in the HP ball bearing as DN's approach 3×10^6 is the use of some type of fluid film bearing. The following is therefore recommended:

   a. The Army should continue work on air bearings.

b. Programs should be initiated to develop low power loss oil film type thrust bearings. One approach may be the hybrid boost bearing*. The other approach may be a hydrodynamic or hydrostatic oil film thrust bearing.

The higher heat rejection of oil film bearings will require the use of a shaft-driven fan air/oil cooler which will probably be required in any case, since the very high power takeoff shaft speed will require use of an integral reduction gearbox with its inherent high heat rejection.

---

* Wilcock, D.F., and Win, L.W., THE HYBRID BOOST BEARING, A METHOD OF OBTAINING LONG LIFE IN ROLLING CONTACT BEARING APPLICATIONS, ASME Trans, July 1970, pp 406-414.

CONCLUSIONS

Based on the study of large and small engine bearing and seal technology, the following conclusions have been reached:

1. Because of the availability of labyrinth seals, shaft seals are not expected to be a barrier problem in small, advanced engines. However, labyrinth seals and associated vent system will require careful design to prevent excessive oil consumption.

2. As in large engines, the higher bearing DN's that will be required in small, advanced engines will result in reduced, calculated B_{10} fatigue life. However, the problem of fatigue life at very high DN's is expected to be more severe because the large bearing solutions of hollow balls or drilled balls are not very adaptable to small engine bearings.

3. In addition to developing techniques for maximizing B_{10} fatigue life of high DN ball bearings, other types of thrust bearings such as hybrid, air or fluid film may ultimately be required to take full advantage of advanced components in small, front drive turboshaft engines.

RECOMMENDATIONS

On the basis of the study, the following recommendations are made:

1. Systematic tests should be conducted on 35-mm-bore-diameter ball bearings manufactured from ausformed M50 material to determine actual B_{10} fatigue life at the loads, temperatures, and DN's that are likely to occur in advanced 2-lb/sec engines. During these tests, the effects of using MIL-L-7808 or MIL-L-23699 oil and filtration level should be evaluated.

2. Systematic tests should be conducted on small ball and roller bearings to establish heat generation equations that are accurate in the 2 to 3×10^6 DN range. These tests should explore means of achieving the desired race temperatures at minimum heat generation and power loss.

3. A program should be established, including component testing, to develop small face-type carbon seals capable of operation at rubbing speeds of 30,000 to 35,000 ft/min. The test seals should be operated under realistic environmental conditions of temperature, pressure, and face runout.

4. In addition to continuing existing air bearing programs, programs should be initiated to develop small, high speed oil film thrust bearings.

5. In view of the potential to achieve a large increase in B_{10} fatigue life, ausformed M50 bearings should be considered for highly loaded ball bearings operating at speeds above 2.0×10^6 DN.